Q.23 Explain method of wire drawing.

Q.24 Describe the construction of cupola furnace.

Q.25 Explain short note on filler rods & fluxes being used in gas welding in brief.

Q.26 Explain various types of moulding sands in brief.

Q.27 Explain magnetic particle inspection method for testing of casting defects.

Q.28 Explain cold chamber die casting with neat sketch.

Q.29 Explain various types of moulds in brief.

Q.30 Explain charging of furnace.

Q.31 Explain various hand tools used for mould making.

Q.32 Explain method of stamping.

Q.33 Explain method of upset forging.

Q.34 Describe any five limitations of use in plastics.

Q.35 Explain principle of arc welding.

Section-D

Note: Long answer type questions. Attempt any two questions out of three questions. (2x10=20)

Q.36 Explain the principle of MIG welding with advantages, disadvantages & applicaions.

Q.37 Explain construction & working of compression moulding machine.

Q.38 Describe various functions of moulding sand. Explain any five desirable properties of moulding sand?

No. of Printed Pages : 4 121733/031733

Roll No. .....

MSIL - 3rd Sem. / Mech. Engg.

Subject : Workshop Technology - 1

Time : 3 Hrs. M.M. : 100

Section-A

Note: Multiple Choice questions. All question are compulsory. (10x1=10)

Q.1 Electrode gets consumed in the following, welding process

(a) Gas (b) Resistance

(c) Thermit (d) Arc

Q.2 In which of the following welding techniques, the weld pool is surrounded by an inert gas

(a) Arc welding

(b) Carbon arc

(c) MIG

(d) Electroslag welding

Q.3 Seam welding is

(a) Arc welding

(b) Multi spot welding

(c) Continuous spot welding

(d) Used for forming sound bars

Q.4 The following gas used in tungsten insert-gas welding process

(a) Acetylene (b) Oxygen

(c) Hydrogen (d) Argon

Q.5 Long wires are made by following process

(a) Extrusion (b) Rolling

(c) Piercing (d) Drawing

Q.6 Core prints are used to

(a) Strengthen core

(b) Form seat to support and hold the core in place

(c) Fabricate core

(d) All of the above

Q.7 The purpose of riser is to

(a) Feed the casting at a rate consistent with the rate of solidification

(b) Act as a reservoir for melton metal

(c) Help feed the casting until all solidification takes place

(d) Feed molten metal from pouring basin to gate

Q.8 The purpose of pouring basin is to

(a) Feed the casting at a rate consistent with the rate of solidification

(b) Act as a reservoir for molten metal

(c) Help feed the casting until all solidification takes place

(d) Feed molten metal from pouring basin to gate

Q.9 TIG welding is best suited for welding

(a) Mild steel (b) Aluminium

(c) Carbon steel (d) Silver

Q.10 Trimming is the process associated with

(a) Press work

(b) Forging

(c) Polishing of metals

(d) Electroplating

Section-B

Note: Objective type questions. All questions are compulsory. (10x1=10)

Q.11 Define soldering.

Q.12 What is machine moulding?

Q.13 Tell the basic function of runner in casting.

Q.14 Define collapsibility of moulding sand.

Q.15 Tell the prime function of gate in casting.

Q.16 Define extrusion.

Q.17 Tell any two materials that are used in making pattern.

Q.18 What are core prints?

Q.19 What is parting off?

Q.20 What is cope in sand casting?

Section-C

Note: Short type questions. Attempt any twelve questions out of fifteen questions. (12x5=60)

Q.21 Explain five limitations of welding.

Q.22 Explain working & principle of resistance welding.

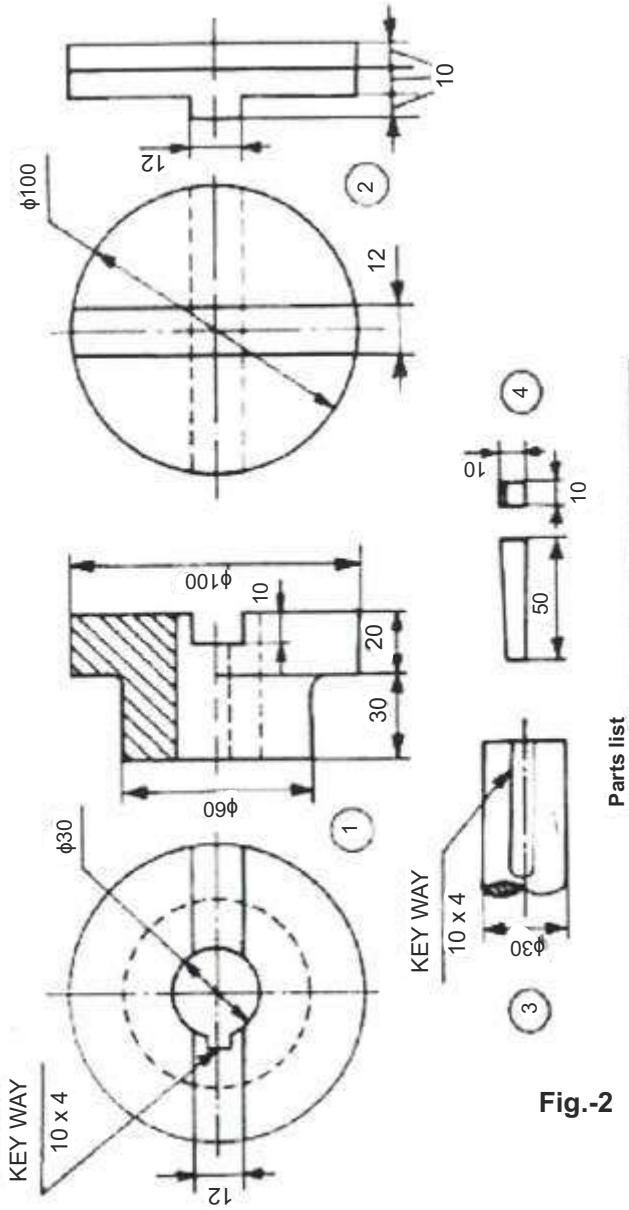

Parts list

Sl. No.	Name	Matl	Qty
1	Flange	MS	2
2	Disc	MS	1
3	Shaft	MS	2
4	Key	MS	2

Fig.-2

No. of Printed Pages : 4
Roll No. .....

121734/031734

MSIL - 3rd Sem. / Mech./Agri./T&D/CNC/G.E., Prod.
Subject : Machine Drawing

Time : 3 Hrs. M.M. : 100

SECTION-A

Note: Objective questions. Attempt any ten parts. All question are compulsory. (10x2=20)

Q.1 Write four industrial application of gears.

Q.2 Explain clearance fit with a neat sketch.

Q.3 Give two applications of ball bearing.

Q.4 Explain significance of pressure angle in gear.

Q.5 Give two industrial applications of transition fit.

Q.6 Define addendenum of a gear.

Q.7 Define top land of a gear.

Q.8 Differentiate between interference fit & clearance fit.

Q.9 Define face of a gear.

Q.10 Name any four drawing equipments in a modern drawing office.

Q.11 Differentiate between hole basis system and shaft basis system.

Q.12 Explain why allowances are given for machining.

SECTION-B

Note: Long answer type questions. Attempt any four parts. Assume missing dimension. (4x20=80)

Q.13 Draw a free hand proportional sketch of Bushed bearing assembly.

Q.14 Draw free hand assembly drawing of Lathe Tool Holder showing front view, top view & right side view in first angle projection.

Q.15 Fig. No. 1 shows the details of a Piston and rings. Assemble the parts and draw the following:

i) Half sectional Front View (Top half in section)

ii) Top View. Use first angle method of projection and insert at least six important dimensions.

Q.16 Draw free hand assembly drawing of Foot Step Bearing showing sectional front view and right side view in first angle projection.

Q.17 Fig. No. 2 shows the details of a "Oldham coupling". Draw the following views of assembly according to the first angle method of projection:

i) Half sectional Front view

ii) Left hand side view

OR

Draw free hand assembly drawing of Expansion pipe joint in first angle projection.

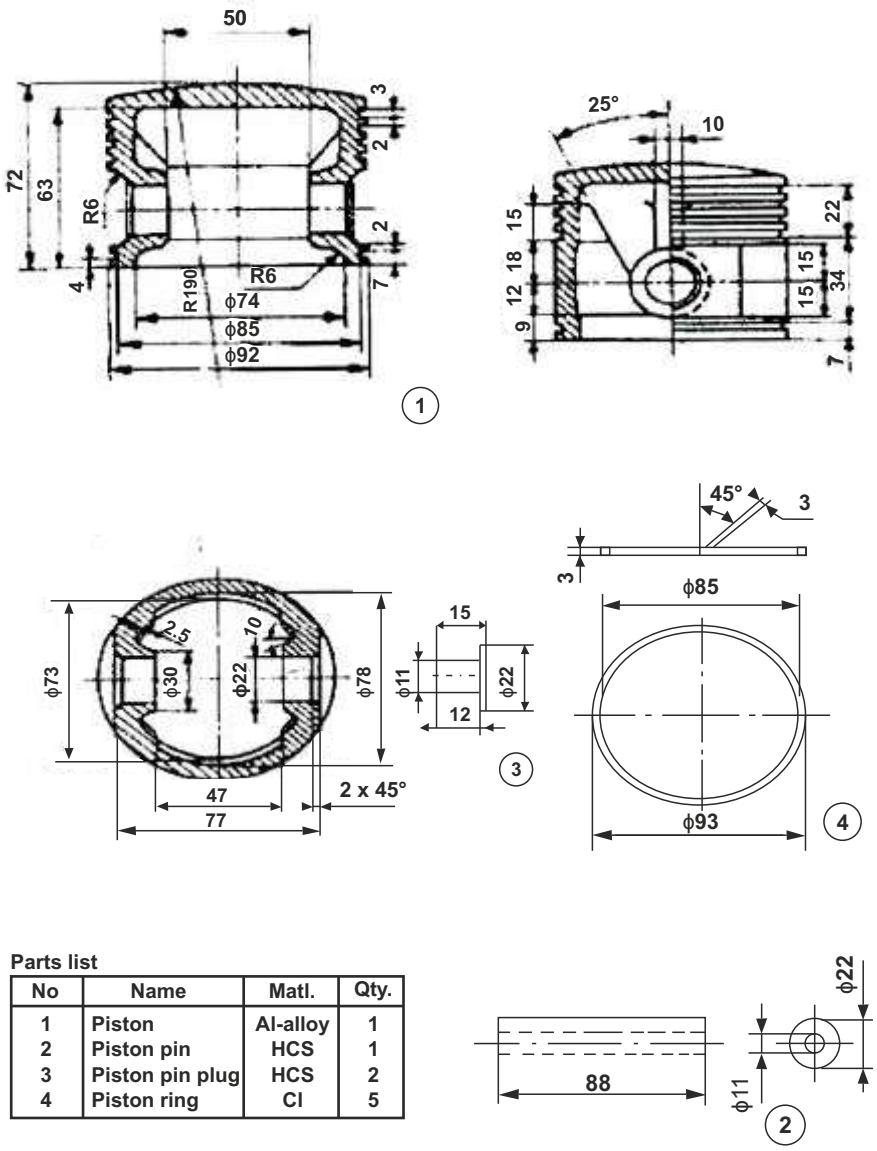

Parts list

No	Name	Matl.	Qty.
1	Piston	Al-alloy	1
2	Piston pin	HCS	1
3	Piston pin plug	HCS	2
4	Piston ring	CI	5

Fig.-1

No. of Printed Pages : 4
Roll No. .....

121745/31745

4th SEM./ Mech. Engg. / Prod. / CAD / CAM
Subject : Machine Design & Drawing

Time : 3 Hrs. M.M. : 100

SECTION-A

Note: Very short Answer type questions. Attempt any 10 questions out of twelve. (10x1=10)

Q.1 Define stress.

Q.2 Tell the prime function of key

Q.3 Define fatigue.

Q.4 Define addendum of gear.

Q.5 Define PCD of gear.

Q.6 What is dwell in cam & follower?

Q.7 What is endurance limit?

Q.8 Name two common materials used in rivets.

Q.9 What is offset in cam & Follower?

Q.10 What is prime function of joint?

SECTION-B

Note: Very Short answer type questions. Attempt any ten questions out of twelve questions. (10x2=20)

Q.11 Explain any two characteristics of a good designer.

Q.12 Explain hardness and resilience.

Q.13 Differentiate between designed work & undersigned work.

Q.14 Explain any two factors affecting factor of safety.

Q.15 Write four functions of keys.

Q.16 How are keys classified?

Q.17 Write any two general design condiderations.

Q.18 Explain any two types of following.

Q.19 Explain the effect of keyway on shaft strength.

Q.20 Explain any two modes of screw joints.

Q.21 Explain the need for design.

Q.22 Explain any two modes of failures of keys.

SECTION-C

Note: Short answer type questions. Attempt any two questions out of three questions. (2x20=40)

Q.23 Explain the terms Stress and Stress Concentration. Explain the various methods to reduce stress Concentration in detail.

Q.24 Draw four involute teeth of a gear 30 teeth of 10 mm module and 25° pressure angle

Q.25 Explain classification of loads in detail.

SECTION-D

Note: Long answer type questions. Attempt any one question out of two questions. (1x30=30)

Q.26 Draw a cam profile to raise a value with harmonic motion through 50 mm in 1/3 of revolution, keep it fully raised through 1/12

revolution & to lower it with harmonic motion in 1/6 revolution. The value remains closed during the rest of the revolution. The minimum radius of cam to be 25mm. The diameter of camshaft is 25mm. The axis of the value rod passes through the axis of camshaft.

Q.27 Design and draw a screw jack which used to lift of 200 KN through a height of 400 mm. The elastic strength of material of screw in tension and compression is 500 N/mm^2 and in shear is 150 N/mm^2. The elastic strength for the material of nut is taken as 150 N/mm^2 in tension, 00 N/mm^2 in compression and 90 N/mm^2 in shear. The bearing pressure between the nut and screw does not exceed 20N/ mm^2.

Q.24 State the overall effect of super heating vapours in a vapour compression system.

Q.25 How refrigerant are classified? Give one example of each.

Q.26 Enlist any five desirable properties of refrigerant.

Q.27 Write a short note on working principle of Electrolux refrigerator.

Q.28 Write the advantages of Solar power refrigeration system over vapours compression systems.

Q.29 Write in brief about thermostatic expansion valve.

Q.30 What are the function of evaporators? Write the name of various types of evaporators.

Q.31 Define the terms Specific humidity and Degree of saturation.

Q.32 Explain the difference between dry compression and wet compression.

Q.33 Write short note on Split air conditioner.

Q.34 Explain in brief about the Humidifiers used in air conditioning systems.

Q.35 Define Air-conditioning. Classify air-conditioning systems.

Section-D

Note: Long answer type questions. Attempt any two questions out of three questions. (2x10=20)

Q.36 Describe with neat diagram the working principle and functions of main parts of vapour compression system.

Q.37 Define and classify the condensers. Write the comparison between air cooled and water cooled condensers.

Q.38 What is the importance of psychrometric chart? Draw psychrometric chart with main lines on it. Discuss all main lines.

No. of Printed Pages : 4 121752/31752

Roll No. .....

MSIL

Subject : Refrigeration and Air Conditioning

Time : 3 Hrs. M.M. : 100

Section-A

Note: Multiple Choice questions. All question are compulsory. (10x1=10)

Q.1 Reversed carnot cycle comprises

(a) two isentropic processes and two adiabatic processes

(b) two isentropic processes and two isothermal processes

(c) two isentropic processes and two isobaric processes

(d) two isentropic processes and two isochoric processes

Q.2 The amount of heat absorbed by the system at low temperature is

(a) COP

(b) refrigerating effect

(c) work done on the system

(d) refrigeration efficiency

Q.3 Sub-cooling is a process of cooling the refrigerant in vapour compression refrigeration system

(a) after compression (b) before compression

(c) before Throttling (d) none of the above

Q.4 The oil separator is incorporated in vapour compression refrigeration system

(a) between evaporator and compressor

(b) between compressor and condenser

(c) between condenser and Throttle valve

(d) between throttle valve and evaporator

Q.5 Freon group of refrigerants

(a) toxic

(b) inflammable

(c) non-toxic and non-inflammable

(d) highly toxic and inflammable

Q.6 Compared to compression systems, absorption systems offer the benefits of

(a) Higher COPs

(b) Lower refrigerant temperatures

(c) Possibility of using low-grade energy sources

(d) All of the abbove

Q.7 What is the process carried out in generator of vapour absorption refrigeration cycle?

(a) weak solution of ammonia in water is heated

(b) strong solution of ammonia in water is heated

(c) only water is heated and heat is given to the ammonia to form its vapour

(d) None of the above

Q.8 A thermostatic expansion valve

(a) Maintains a constant degree of superheat

(b) Increases the mass flow rate of refrigerant as the refrigeration load increases

(c) Prevents slugging of compressor

(d) all of the above

Q.9 Electrolux refrigerators has the following working substances

(a) Hydrogen

(b) Ammonia and Hydrogen

(c) Ammonia and water

(d) Ammonia, hydrogen and water

Q.10 Which of the following system can be called as mechanical system of refrigeration

(a) Vapour absorption system

(b) Vapour compression system

(c) Steam jet refrigeration system

(d) None of the above

Section-B

Note: Objective type questions. All questions are compulsory. (10x1=10)

Q.11 _____ means the cooling for removal of heat from system.

Q.12 C.O.P. is the ratio of _____ and _____.

Q.13 _____ is the heart of refrigeration system.

Q.14 Chemical formula of R-12 is _____.

Q.15 _____ is used to detect leakage of Freon vapours.

Q.16 Speciifc humidity is also called _____.

Q.17 _____ is a substance that absorbs heat through expansion and vaporization.

Q.18 Normally gas leaves the evaporator in _____ condition before it enters the wcompressor.

Q.19 R-12 will boil at _____ temperature inside the evaporator.

Q.20 Curved lines on the psychometric chart indicate _____.

Section-C

Note: Short type questions. Attempt any twelve questions out of fifteen questions. (12x5=60)

Q.21 Differentiate between COP and efficiency.

Q.22 How does Air conditioning differ from refrigeration?

Q.23 State the function of liquid line and suction line in vapour compression system.

Q.27 Define straightness and flatness.

Q.28 Explain the effects of errors on quality.

Q.29 What is normal distribution? Explain.

Q.30 Differentiate between variable and attribut control charts.

Q.31 What is ISO-9000? What are is advantages?

Q.32 Write short note on Kaizen.

Q.33 Explain national and international codes.

Q.34 Distinguish between active and passive transducers.

Q.35 Explain briefly LVDT.

SECTION-D

Note: Long answer type questions. Attempt any two questions out of three questions. (2x10=20)

Q.36 Describe with the help of a neat sketch, the working of an outside micrometer.

Q.37 Explain the factors influencing the quality of manufacture.

Q.38 What is sampling plan? Describe single and double sampling plan.

No. of Printed Pages : 4

Roll No. .....

121762/31762

Mech.Engg.

Subject : Inspection And Quality Control

Time : 3 Hrs. M.M. : 100

SECTION-A

Note: Multiple choice questions. All questions are compulsory (10x1=10)

Q.1 S.I Unit of Temperature

a) Kelvin b) Kg

c) Ampere d) Second

Q.2 According to BIS, the total number of grades of tolerance are

a) 12 b) 14

c) 16 d) 18

Q.3 Angular measurement can be measured by

a) Steel rule b) Sine bar

c) Dial indicator d) Micrometer

Q.4 Autocollimator is used for measurement of

a) Linear measurement

b) Error

c) Length

d) Angular measurement

Q.5 Dial indicator is a type of comparator

a) Mechanical b) Electrical

c) Computer d) Electronics

Q.6 The mode of observations 2,3,2,4,5,2,6,7,2 are

a) 2 b) 4

c) 3 d) 5

Q.7 Main function of inspection is to increase and maintain _____of product.

a) Length b) Quality

c) Quantity d) weight

Q.8 Self generating transducers are

a) Secondary b) Passive

c) Active d) Inverse

Q.9 LVDT is a

a) Capacitive Transducer

b) Resistive Transducer

c) Inductive Transducer

d) None of them

Q.10 According to S.I system of units, the number of fundamental units are_____

a) 2 b) 3

c) 5 d) 7

SECTION-B

Note: Objective Completion type questions. All questions are compulsory. (10x1=10)

Q.11 Define Inspection.

Q.12 Name the S.I unit of Length.

Q.13 Define Measurement.

Q.14 Define the term comparators.

Q.15 Define the term Error.

Q.16 Define statistical quality control.

Q.17 Define total quality management.

Q.18 Write down the full form of B.I.S.

Q.19 Define transducer.

Q.20 What for an autocollimator is used?

SECTION-C

Note: Short answer type questions. Attempt any twelve questions out of fifteen questions. (12x5=60)

Q.21 Explain interchangeability and its type.

Q.22 Explain line and wavelength standards.

Q.23 Explain planning of inspection.

Q.24 Write a short note on Limit gauges.

Q.25 Explain types of inspection.

Q.26 Write a short note on sine bar.

Q.29 Discuss the difference between a generator and an alternator.

Q.30 Write in brief about Armature and Field coils used in Dynamo.

Q.31 What are the types of suspension systems? Write the characteristics of any one.

Q.32 Differentiate between the functions of a spring and shock absorber.

Q.33 Write the procedure of brake bleeding.

Q.34 What is the function of brake drum, brake lining and brake adjustment?

Q.35 What is hydrometer? How it is used for checking the specific gravity of electrolyte.

Section-D

Note: Long answer type questions. Attempt any two questions out of three questions. (2x10=20)

Q.36 What is the function of a clutch? Explain the working of a multi plate clutch with the help of a simple diagram.

Q.37 Describe the working of a synchromesh gear box. Write it merit and de-merits over constant mesh type gear boxes.

Q.38 Describe the construction and working of telescopic type shock absorber.

No. of Printed Pages : 4 121763/31763

Roll No. .....

MSIL / Mechanical Engineering

Subject : Automobile Engineering

Time : 3 Hrs. M.M. : 100

Section-A

Note: Multiple Choice questions. All question are compulsory. (10x1=10)

Q.1 For majority of low and medium power engines, the number of cylinder is

(a) Four (b) Six

(c) Two (d) A single cylinder

Q.2 Which is not a common component between a Diesel and Petrol engine

(a) Exhaust silence (b) Spray nozzles

(c) Dynamo (d) Camshaft

Q.3 The most accurate petrol injection system is the

(a) throttle body injection

(b) port injection

(c) direct injection

(d) manifold injection

Q.4 Overlap of valve occurs between

(a) Exhaust and intake stroke

(b) Compression and power stroke

(c) Intake and compression stroke

(d) Power and exhaust stroke

Q.5 The function of universal joint is to allow the propeller shaft to

(a) Bend sideways

(b) Change length

(c) Transfer torque at an angle
(d) Change inclination

Q.6 The component of torque convertor that multiplication of torque is the
(a) Impeller (b) Stator
(c) Turbine (d) Pump

Q.7 Brake fade is
(a) loss of hydraulic fluid
(b) loss of pedal
(c) loss of co-efficient of friction
(d) none of these

Q.8 Spring eyes in the case of light vehicles are usually lined with
(a) Metal bushes (b) Steel bushes
(c) Rubber bushes (d) Bronze bushes

Q.9 The provision made to allow a leaf spring to vary its length is a
(a) Spline in the spring eye
(b) Swinging shackle
(c) Sliding centre bolt
(d) Rubber U-bolt mounting

Q.10 The output of an alternator is controlled by
(a) Voltage regulator (b) Cut out delay
(c) Current regulator (d) All of the above

Section-B

Note: Objective type questions. All questions are compulsory. (10x1=10)

Q.11 A self propelled vehicle considered to carry passengers or goods and ply on the road surface is called a/an _____.

Q.12 In rear engine rear wheel drive arrangement, the necessity of a propeller shaft is _____.

Q.13 The distance travelled by the piston per unit time is called _____.

Q.14 The term MPFI is used in _____ engine.

Q.15 Increase in torque in a vehile is obtained by _____.

Q.16 Adjustment for backlash in a differential is provided between _____.

Q.17 The break bleeding process removes _____ from the system.

Q.18 Wheel cylinder is also called a _____ cylinder in hydraulic break system.

Q.19 Coil springs are used in independent _____ system and other _____ duty vehicles.

Q.20 In the air suspension system, the air spring assembly consists of bellows enclosed in _____ dome.

Section-C

Note: Short type questions. Attempt any twelve questions out of fifteen questions. (12x5=60)

Q.21 Write the comparison of MPFI with carburetor system.

Q.22 Explain the multi point fuel injection system.

Q.23 What is chassis? Write about the layout of any three chassis components.

Q.24 Write about any five ways for classification of Automobiles.

Q.25 Discuss the advantages of a constant mesh gear box over sliding mesh type.

Q.26 Explain the necessity of a differential in an automobile.

Q.27 Define functions and Principle of steering system.

Q.28 Write a short note on kingpin inclination. Write any two advantages of it.

No. of Printed Pages : 4 171743/30434/452
Roll No. .....

4th Sem. / Mechanical Engineering
Subject : Thermodynamic-I

Time : 3 Hrs. M.M. : 100

Section-A

Note: Multiple Choice questions. All question are compulsory. (10x1=10)

Q.1 A closed system is one in which
(a) mass does not cross boundaries of the system, though energy may do so
(b) mass crosses the boundary but not the energy
(c) neither mass nor energy crosses the boundaries of the system
(d) both energy and mass cross the boundaries of the system

Q.2 Which of the following variables controls the physical properties of a perfect gas
(a) pressure (b) temperature
(c) volume (d) all of the above

Q.3 Characteristic gas constant of a gas is equal to
(a) C/Cv (b) Cv/Cp
(c) Cp-Cv (d) Cp+Cv

Q.4 The behaviour of gases can be fully determined by
(a) 1 law (b) 2 laws
(c) 3 laws (d) 4 laws

Q.5 According to first law of thermodynamics
(a) mass and energy are mutually convertible
(b) Carnot engine is most efficient
(c) heat and work are mutually convertible
(d) mass and light are mutually convertible

Q.6 Which of the following parameters is constant for a mole for most of the gases at a given temperature and pressure
(a) enthalpy (b) volume
(c) mass (d) entropy

Q.7 For which of the following substances, the gas laws can be used with minimum error
(a) dry steam (b) wet steam
(c) saturated steam (d) superheated steam

Q.8 Which of the following statement is correct?
(a) A simple vertical boiler has one fire tube
(b) A fire tube boiler occupies less than a water tube boiler, for a given power
(c) Steam at a high pressure and in large quantities can be produced with a simple vertical boiler
(d) all of the mentioned

Q.9 Specific heat of air at constant pressure is equal to
(a) 0.17 (b) 0.21
(c) 0.24 (d) 1.0

Q.10 An actual engine is to be designed having same efficiency as the Carnot cycle. Such a proposition is
(a) feasible
(b) impossible
(c) possible
(d) possible, but with lot of sophistications

Section-B

Note: Objective type questions. All questions are compulsory. (10x1=10)

Q.11 Define system .

Q.12 What is gas constant?

Q.13 What is irreversible process?

Q.14 State second law of thermodynamics.

Q.15 Define perpetual motion machine of second kind.

Q.16 Describe specific heat at constant pressure.

Q.17 Define throttling process.

Q.18 Define boiler.

Q.19 Define mechanical efficiency.

Q.20 Describe air compressor.

Section-C

Note: Short type questions. Attempt any twelve questions out of fifteen questions. (12x5=60)

Q.21 What is thermodynamics system? Explain is types.

Q.22 Explain thermodynamic equilibrium & its types.

Q.23 Explain Avagadro's Law.

Q.24 How do we obtain characteristic gas equation after combining Boyle's and Charles Law.

Q.25 Explain constant volume process with the help of P-V diagram.

Q.26 state & explain first law of thermodynamics in brief.

Q.27 What are the limitations of first law of thermodynamics?

Q.28 State & explain Van der waals equation.

Q.29 Write a short note on enthalpy and specific heat capacities of an ideal gas.

Q.30 Describe the procedure to find dryness fraction steam of using separating calorimeter.

Q.31 Write five uses of steam.

Q.32 Differentiate between fire tube boiler & water tube boiler.

Q.33 Draw sketch of carnot cycle with proper labelling.

Q.34 Explain construction and working of single stage Air compressor.

Q.35 Different between reciprocating air compressor & rotary air compressor.

Section-D

Note: Long answer type questions. Attempt any two questions out of three questions. (2x10=20)

Q.36 Derive an expression for work done, change in internal energy and rate of heat transfer for an isothermal process.

Q.37 Explain Kelvin Plank's & Classius statement. Prove the equivalence of statements.

Q.38 Explain construction and working of Babcock and Wilcox boiler with neat and clean diagram.

Note: Course Outcome (CO) mentioned in the question paper is for official purpose only.

No. of Printed Pages : 4
Roll No. 171751

5th SEM / Mechanical
Subject : Thermodynamics-II

Time : 3 Hrs. M.M. : 100

SECTION-A

Note: Multiple choice questions. All questions are compulsory (10x1=10)

Q.1 Two stroke petrol engine is used in
a) Moped b) Scooters
c) Two wheelers d) All of above (CO-1)

Q.2 Gas turbines works on
a) Brayton cycle b) Dual cycle
c) Diesel cycle d) Otto cycle (CO-6)

Q.3 Morse test can be conducted for
a) petrol engines b) Diesel engines
c) Multi cylinder engines
d) All of above (CO-5)

Q.4 A stoichiometric air-fuel ratio is
a) Chemical correct mixture
b) Lean mixture
c) Rich mixture for idling
d) Rich mixture for overloads (CO-2)

Q.5 A carburettor is used to supply
a) Petrol, air & lubricating oil
b) Air & Diesel
c) Petrol & lubricating oil
d) Petrol & air (CO-2)

Q.6 Advantages of gas turbine over I.C. engines are
a) It has low weight to power ratio
b) It is perfectly balanced (CO-6)
c) It is compact unit d) All of above

Q.7 Most commonly used lubricant in I.C. engines is
a) Vegetable oil b) Synthetic oil
c) Animal oil d) Mineral oil (CO-4)

Q.8 Solid injection is also known as
a) Plastic injection b) Brittle injection
c) Rigid injection d) Airless injection
(CO-3)

Q.9 A C I engine works on:
a) Rankine cycle b) Carnot cycle
c) Otto cycle d) Diesel cycle (CO-1)

Q.10 The air-fuel ratio of the petrol engine is controlled by
a) Fuel pump b) Injector
c) Governor d) Carburettor (CO-2)

SECTION-B

Note: Objective type questions. All questions are compulsory. 10x1=10

Q.11 Cycle on which petrol engine works is_____(CO-1)

Q.12 Fuel filters is used to regulate the fuel supply. [T/F] (CO-3)

Q.13 In diesel engine, fuel is ignited by _____ method. (CO-3)

Q.14 B.H.P is determined by_____ (CO-5)

Q.15 Various types of turbines are: (i)..... (ii)..... (CO-6)

Q.16 Overcooling of an engine is harmful. [T/F] (CO-4)

Q.17 Fuel pumps supplies petrol to..... (CO-2)

Q.18 Constant pressure gas turbine is also known as..... (CO-6)

Q.19 The battery ignition system is employed in..... (CO-2)

Q.20 Water cooling system is employed in motorcycles. (CO-4)

SECTION-C

Note: Short answer type questions. Attempt any twelve questions out of fifteen questions. 12x5=60

Q.21 Write advantages of closed cycle gas turbine over open cycle gas turbine. (CO-6)

Q.22 Define following: (CO-2)

a) Carburation b) Air—fuel ratio

c) Spark plug d) Firing order

Q.23 Write the common defects which occur in cooling system. (CO-4)

Q.24 Write a short note on Morse test. (CO-5)

Q.25 What are the requirements of fuel injection system in diesel engine? (CO-3)

Q.26 Write the functions of a lubricant. (CO-4)

Q.27 Explain following terms:

a) Mechanical efficiency

b) Thermal efficiency (CO-5)

Q.28 Explain in brief CRDI system. (CO-3)

Q.29 Write five different between petrol engine and diesel engine. (CO-1)

Q.30 Write the functions of a carburettor. (CO-2)

Q.31 Write short note on Rocket engine. (CO-6)

Q.32 Differentiate between two stroke and four stroke engine. (CO-1)

Q.33 Write the applications of steam nozzles. (CO-6)

Q.34 Write a short note on Air — fuel ratio. (CO-2)

Q.35 Describe with neat sketch working principle of four stroke petrol engine. (CO-1)

SECTION-D

Note: Long answer type questions. Attempt any two questions out of three questions. 2x10=20

Q.36 Explain the principle of operation of Turbojet engine with neat diagram. Write its advantages and disadvantages too. (CO-6)

Q.37 Explain the construction, working of fuel injection pump with neat sketch. (CO-3)

Q.38 Explain the working of four stroke diesel engine. (CO-1)

Q.25 5 m^3 of a gas at 600 kPa absolute pressure expands at constant temperature to a volume of 15m^3. Find final pressure of gas in bar (CO-2)

Q.26 Explain Zeroth law of thermodynamics with neat diagram. (CO-2)

Q.27 Briefly describe Carnot cycle. (CO-6)

Q.28 Define heat source and heat sink. (CO-2)

Q.29 Derive an expression of work done for isothermal process. (CO-3)

Q.30 Define wet, dry and superheated steam. (CO-4)

Q.31 Explain centrifugal compressor briefly. (CO-6)

Q.32 Briefly explain specific heats. (CO-2)

Q.33 Write uses of steam. (CO-4)

Q.34 Explain equivalence of Kelvin-Planck's and Clausius statements. (CO-2)

Q.35 Write uses of compresses air. (CO-6)

SECTION-D

Note: Long answer type questions. Attempt any two questions out of three questions. 2x10=20

Q.36 Derive an expression for relation between C_P and C_V. (CO-3)

Q.37 Explain construction, working of Nestler boiler with neat diagram. (CO-5)

Q.38 Derive expression of work done, heat transfer and internal energy for adiabatic process. (CO-2)

No. of Printed Pages : 4

Roll No. 181732/121732/031732/ 94834/117232

3rd SEM / Mechanical

Subject : Thermodynamics-I / Principals of Therm. Engg.

Time : 3 Hrs. M.M. : 100

SECTION-A

Note: Multiple choice questions. All questions are compulsory (10x1=10)

Q.1 Everything external to the system is known as (CO-1)

a) Boundary b) System

c) State d) Surroundings

Q.2 Air compressor is an example of (CO-1)

a) Adiabatic system b) Isolated system

c) Open system d) Closed system

Q.3 According to Boyles's law of perfect gas, the absolute pressure of give mass varies inversely asit's

a) Temperature

b) Volume, if temperature is kept constant

c) Absolute temperature, if volume is kept constant (CO-2)

d) None of these

Q.4 Constant volume process is also known as (CO-2)

a) Isobaric process b) Isothermal process

c) Adiabatic process d) Isochoric process

Q.5 PMM-I is the machine which violates (CO-2)

a) Boyle's law b) Charles law

c) I law of thermodynamics

d) II law of thermodynamics

Q.6 The process in which solid phase directly transferred into vapour phase is (CO-3)

a) Evaporation b) Ablimation

c) Sublimation d) Condensation

Q.7 The device which supply feed water to the boiler is known as (CO-5)

a) Water level indicator

b) Air preheater

c) Economiser d) Feed pump

Q.8 The devices which increases the efficiency of boiler is known as (CO-5)

a) Mounting b) Valves

c) Accessories d) None of these

Q.9 Otto cycle is also known as (CO-6)

a) Constant pressure cycle

b) Constant temperature cycle

c) Constant volume cycle

d) None of these

Q.10 With increase in compression ratio, the efficiency of cycle (CO-6)

a) Decreases b) Remain same

c) Increases d) None of these

SECTION-B

Note: Objective type questions. All questions are compulsory. 10x1 = 10

Q.11 _____ separates system from its surroundings. (CO-1)

Q.12 The relation between two specific heats of a gas is_____ (CO-1)

Q.13 What is isobaric process? (CO-2)

Q.14 Heat can flow from a body at_____ temperature to_____temperature unaided. (CO-2)

Q.15 What is an ideal gas? (CO-3)

Q.16 Define wet steam. (CO-4)

Q.17 Name the types of boilers. (CO-5)

Q.18 Diesel cycle is constant_____cycle. (CO-6)

Q.19 What is an axial flow compressor? (CO-6)

Q.20 Define enthalpy. (CO-1)

SECTION-C

Note: Short answer type questions. Attempt any twelve questions out of fifteen questions. 12x5 = 60

Q.21 Explain open and closed systems briefly with suitable examples. (CO-1)

Q.22 Write classification of boilers. (CO-5)

Q.23 Write SFEE and explain it. (CO-2)

Q.24 Write difference between water tube and fire tube boilers. (CO-5)

No. of Printed Pages : 4
Roll No. ..... 181734/171734/121734 /031734

3rd SEM./ Mechanical Engg
Subject : Mechanical Engg Drawing

Time : 3 Hrs. M.M. : 100

SECTION-A

Note: Very short Answer type questions. Attempt any 10 questions out of twelve. (10x2=20)

Q.1 Give the need of Limits in mass production. (CO1)

Q.2 Define allowance. (CO1)

Q.3 What is the need of giving tolerances to the parts? (CO1)

Q.4 Define interference fit. (CO1)

Q.5 What do you mean by shaft basis system? (CO1)

Q.6 Give one application where universal coupling is used? (CO3)

Q.7 What is the use of bearings? (CO2)

Q.8 Give the material used for manufacturing pulley. (CO2)

Q.9 What are the uses of expansion joint? (CO2)

Q.10 Give the need of drilling jig. (CO4)

Q.11 Which part of IC engine is connected to the big end of connecting rod? (CO5)

Q.12 Define dedendum (CO6)

SECTION-B

Note: Long answer type questions. Attempt any four questions out of five questions. (20x4=80)

Q.13 Draw at least two views of L-wall bracket as shown in figure below in first angle projection.

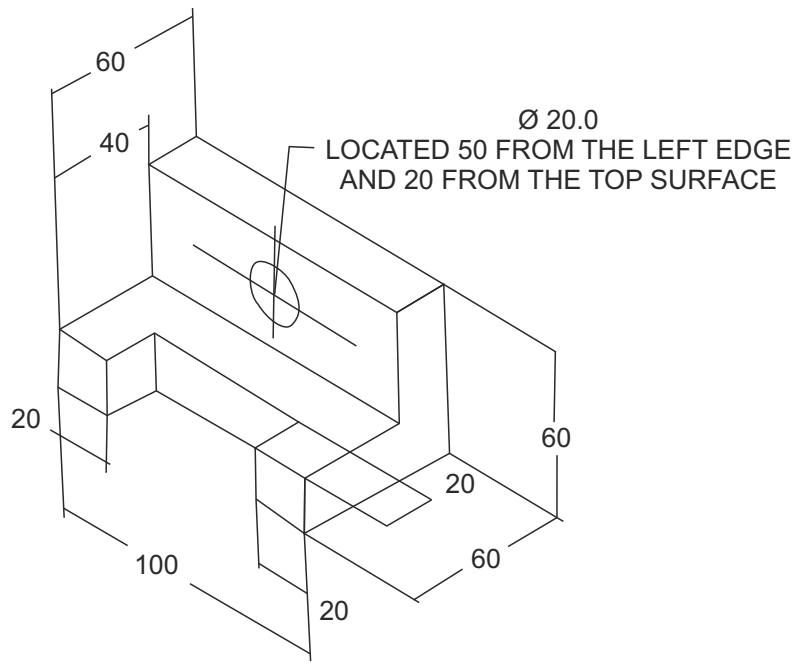

Q.14 Explain any five gear terminologies with their supporting free hand sketches. (CO6)

Q.15 Assemble the parts of Screw jack given in fig. 1 and drawn the Elevation (Right half in section)- Assume and missing dimension (CO4)

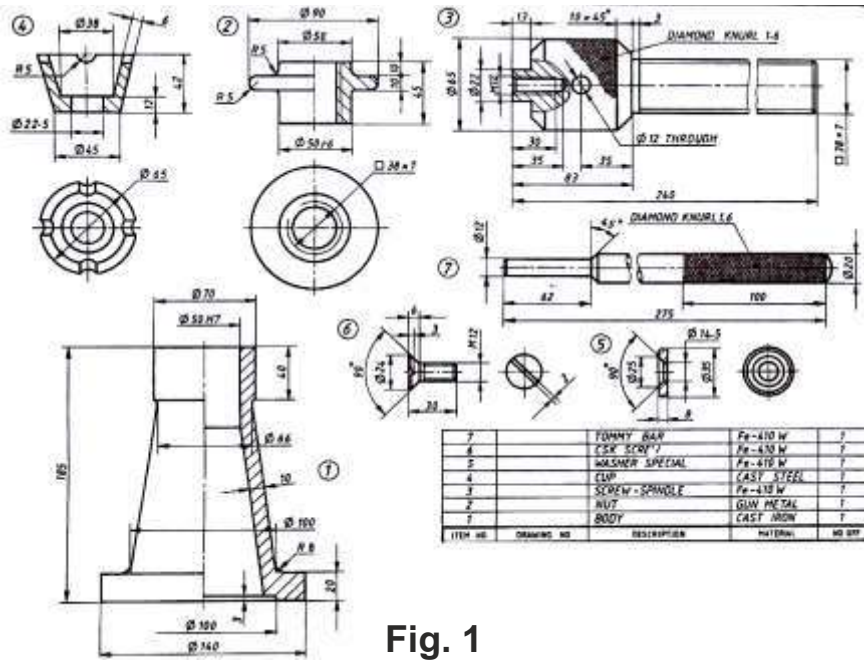

Fig. 1

Q.16 Draw the labelled assembled front view of the petrol engine connecting rod from the given figure -assume any missing dimension (CO5)

Part list

Part No	Name	Material	Qty
1	Rod	Forged steel	1
2	Cap	Forged steel	1
3	Bearing brass	Gun metal	2
4	Bearing bush	Phosphor bronze	1
5	Bolt	Medium carbon steel	2
6	Nut	Medium carbon steel	2

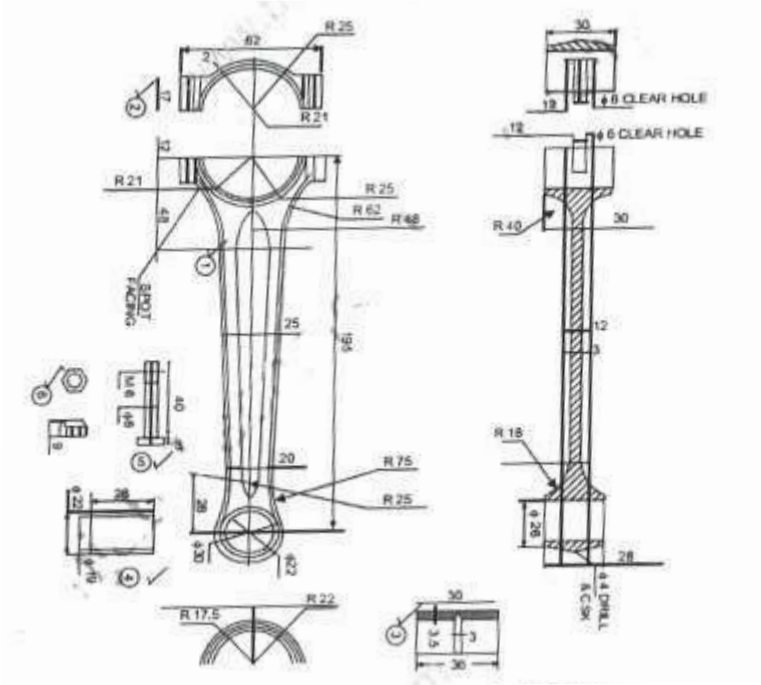

Q.17 Figure below shows the pictorial view of a FOOT STEP BEARING. (CO2)

Draw to a conventional scale the following :

a) Full sectional front view.

b) Top View.

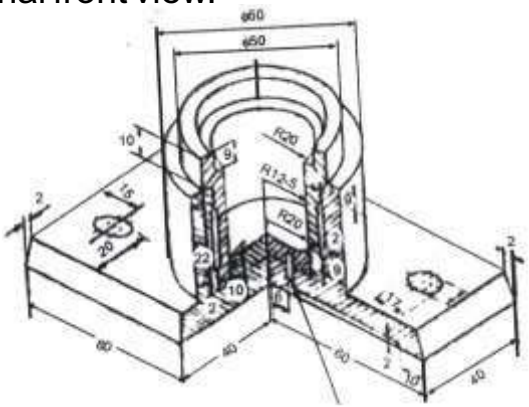

No. of Printed Pages : 4

Roll No. ..... 181741/171741/121741 /31741/117243/121841

4th Sem. / Mech, Auto, G.E., CNC, Prod., T &D

Subject : Hydraulics & Pneumatics / Hyd. & Hyd. M/C

Time : 3 Hrs. M.M. : 100

SECTION-A

Note: Multiple choice questions. All questions are compulsory (10x1=10)

Q.1 Surface tension is caused by the force of_____ at the free surface.

a) Cohesion b) Adhesion
c) both (a) and (b) d) None of these

Q.2 Specific volume is_____Mass density.

a) Equal to b) less than
c) greater than d) reciprocal of

Q.3 A pressure of 25 m of head of water is equal to

a) 25 KN/m^2 b) 245 KN/m^2
c) 2500 KN/m^2 d) 2.5 KN/m^2

Q.4 The C_d of an orifice is always_____

a) Greater than C_c b) Equal to C_v
c) Equal to C_c d) Less than C_c

Q.5 Piezometer is used to measure

a) Gauge pressure b) Vacuum Pressure
c) Pressure head d) Absolute Pressure

Q.6 Which of the following is a basic component of hydraulic system?

a) Pump b) Filter
c) Actuator d) All of the above

Q.7 Darcy-Weisback equation is used to find loss of head due to

a) Sudden enlargement
b) Sudden contraction
c) Friction
d) None of the above

Q.8 Specific speed of an impellor turbine range from

a) 12 to 17 b) 80 to 400
c) 300 to 1000 d) 1000 to 1200

Q.9 In a centrifugal pump, the sum of suction head and delivery head is known as

a) Manometric head b) Total head
c) Static head d) None of these

Q.10 The mass density of water in SI units

a) 1000 kg/m^3 b) 9810 kg/m^3
c) 1 kg/m^3 d) 9.81 kg/m^3

SECTION-B

Note: Objective Completion type questions. All questions are compulsory. (10x1=10)

Q.11 Hydraulic press work on_____.

Q.12 Write the Chezy's equation of head loss.

Q.13 What is pilot tube?

Q.14 Define Priming.

Q.15 What is oil power hydraulics?

Q.16 List any two type of fluids.

Q.17 Name any two seal materials.

Q.18 Write the name of common problems in pneumatic system.

Q.19 Define viscosity.

Q.20 List various hydraulic actuators.

SECTION-C

Note: Short answer type questions. Attempt any twelve questions out of fifteen questions. (12x5=60)

Q.21 A liquid has a specific gravity of 1.8 and kinematic viscosity of 5.8 strokes. What is its dynamic viscosity?

Q.22 Write short note on U-tube manometer.

Q.23 Explain water hammer.

Q.24 Explain continuity equation of flow.

Q.25 Differentiate between Newtonian and non-Newtonian fluids.

Q.26 Write the advantages of hydraulic system over Pneumatic system.

Q.27 How are centrifugal pumps classified?

Q.28 Classify seals.

Q.29 Head of water over the centre of an orifice of diameter 20 mm is 1.25m. The actual discharge through orifice is 0.85 lit/sec. Find coefficient of discharge.

Q.30 Explain the working of hydraulic press.

Q.31 Explain the assumptions used in Bernoulli's theorem.

Q.32 Draw a neat sketch of rotary type air compressor with complete nomenclature.

Q.33 Differentiate between hydraulic and pneumatic systems.

Q.34 Explain the importance of filtering, pressure regulation and lubrication unit in a pneumatic system.

Q.35 Explain surface tension and capillarity.

SECTION-D

Note: Long answer type questions. Attempt any two questions out of three questions. (2x10=20)

Q.36 Write short note on:

a) Pelton wheel

b) Venturimeter

Q.37 Explain construction & working of hydraulic ram with a neat sketch.

Q.38 A differential manometer is connected at the two points A and B in pipe containing an oil of specific gravity 0.8, shows a difference in mercury level as 15 mm. Determine the difference in pressure at the two points in term of head of water.

No. of Printed Pages : 4
Roll No. 181743/121743/031743

4th Sem./ Mechanical Engineering, CNC, Adv. Monly. Tech.

Subject : Thermodynamics-II / I.C. Engines

Time : 3 Hrs. M.M. : 100

SECTION-A

Note: Multiple choice questions. All questions are compulsory (10x1=10)

Q.1 In a diesel engine, the fuel is ignited by (CO1)
a) Spark
b) injected fuel
c) heat resulting from compressing air that is supplied for combustion
d) ignition

Q.2 Compression ratio of IC. engines is (CO1)
a) the ratio of volumes of air cylinder before compression stroke and after compression stroke
b) volume displaced by piston per stroke and clearance volume in cylinder
c) ratio of pressure after compression and before compression
d) swept volume/cylinder volume

Q.3 The process of breaking up or a liquid into fine droplets by spraying is called (CO2)
a) vaporisation b) carburetion
c) ionisation d) atomisation

Q.4 A 75 cc engine has following parameter as 75 cc (CO2)
a) fuel tank capacity b) lub oil capacity
c) swept volume d) cylinder volume

Q.5 _____is the difference between indicated and brake power of an engine. (CO3)
a) Air flow
b) Emissions
c) Friction power
d) None of the mentioned

Q.6 Pressure in condenser_____ (CO3)
a) More than atmospheric pressure
b) Less than atmospheric pressure
c) Equal to atmospheric pressure
d) None of these

Q.7 The function of a condenser in a thermal power plant is_____ (CO4)
a) To act as reservior to receive steam for turbine
b) To condense steam into condensate to be reused again
c) To create vaccum
d) All of the above

Q.8 The ratio of actual vaccum to the ideal vacuum in a condenser is called_____ (CO6)
a) Condenser efficiency
b) Vacuum efficiency
c) Boiler efficiency
d) Nozzle efficiency

Q.9 _____compressors can be used in turbojets. (CO6)
a) Radial
b) Centrifugal
c) Radial & centrifugal
d) None of the mentioned

Q.10 _____is the ability of the oil to resist internal deformation due to mechanical stresses. (CO6)

a) Viscosity
b) Flash point
c) Fire point
d) None of the mentioned

SECTION-B

Note: Objective type questions. All questions are compulsory. 10x1=10

Q.11 Describe carburetion. (CO1)

Q.12 Define clearance volume. (CO1)

Q.13 Write the use of spark plug. (CO2)

Q.14 Write the application of magneto ignition system. (CO3)

Q.15 Write full form of CRDI. (CO3)

Q.16 Name the types of cooling system in an engine. (CO4)

Q.17 Define relative efficiency of an I.C. engine (CO5)

Q.18 Write any two types of steam nozzles. (CO6)

Q.19 What is governing of steam turbines? (CO6)

Q.20 Write any two limitation of gas turbine. (CO6)

SECTION-C

Note: Short answer type questions. Attempt any twelve questions out of fifteen questions. 12x5=60

Q.21 Enlist the various parts of IC engine and materials used for making them. (CO1)

Q.22 Explain with diagram battery ignition system. (CO2)

Q.23 What are the air fuel mixture requirements at different conditions in an IC engines. (CO2)

Q.24 Describe the working of fuel feed pump with sketch. (CO3)

Q.25 Describe the different systems of fuel injection used in diesel engine. (CO3)

Q.26 What is need of cooling system in an automobile? (CO4)

Q.27 What are the main types of lubricants used in IC engines? Give example. (CO4)

Q.28 Draw a line diagram of water cooling system and name the parts. (CO4)

Q.29 Enlist the advantages of using alternate fuels in IC engines. (CO5)

Q.30 Explain the significance of heat balance sheet. (CO5)

Q.31 What are the functions of a condenser? (CO6)

Q.32 Explain the elements of a condensing plant. (CO6)

Q.33 Give the function and use of steam turbine. (CO6)

Q.34 Write a short note on close cycle gas turbine. (CO6)

Q.35 Write the differences between gas turbine and reciprocating IC engine. (CO6)

SECTION-D

Note: Long answer type questions. Attempt any two questions out of three questions. 2x10=20

Q.36 Explain various operations of an otto cycle in detail. (CO1)

Q.37 What is morse test? Explain the procedure to find out IP of a multi cylinders IC engine without using an indicator. (CO5)

Q.38 Explain the principle of operation of Ram jet engine with a neat diagram. Also write its advantages and disadvantages. (CO6)

No. of Printed Pages : 4
Roll No. .....

181744/171744/
121744/31744

Auto Mech, Product . T&D, CNC, GE, CAD/CAM

Subject : Workshop Technology - 11

Time : 3 Hrs. M.M. : 100

SECTION-A

Note: Multiple choice questions. All questions are compulsory (10x1=10)

Q.1 Multi point cutting tools are used in (CO3)

a) Shaper machine b) Milling machine
c) Lathe machine d) Option A & C

Q.2 By increasing cutting speed, amount of heat generated. (CO1)

a) Increase b) Decrease
c) Remains constant d) None of them

Q.3 By increasing feed rate, amount of heat generated (CO1)

a) Increase b) Decrease
c) Remains constant d) None of them

Q.4 Cutting tools removes the metal from work piece in the form of. (CO2)

a) In the form of blocks b) Chips
c) Powder d) Option A & C

Q.5 A cutting tool used to enlarge and finish a hole is known as. (CO4)

a) Tap b) Drill
c) Die d) Reamer

Q.6 Which of the following attachments can be used on centre lathe. (CO9)

a) Grinding b) Copying
c) Milling d) All of these

Q.7 Boring is done with the help of a tool known as (CO10)

a) Taps b) Twist drill
c) Boring cutter d) All of these

Q.8 Which one of the following planers has two tables. (CO7)

a) Open side planer
b) Edge planer
c) Divide table planer
d) Double housing planer

Q.9 Graphite is a type of lubricant (CO12)

a) Solid b) Semi-solid
c) Liquid d) None of the above

Q.10 Drill jig bushings are generally made of. (CO6)

a) Tool steel b) Mild steel
c) Alloy steel d) Cast iron

SECTION-B

Note: Objective Completion type questions. All questions are compulsory. 10x1=10

Q.11 The greater the_____radius stronger the tool. (CO2)

Q.12 Define boring.

Q.13 Tool head is used for feeding the tool for planning angular surface. (True/False) (CO7)

Q.14 In broaching machine single point cutting tool is used.(True/False) (CO13)

Q.15 jigs and fixtures are used for_____production. (CO11)

Q.16 Sulphurised mineral oil is used for machining alloy steel (True/False) (CO12)

Q.17 V-blocks are used to hold_____work piece (CO11)

Q.18 In shaper slider and slotted lever is a _____pair (Turning/sliding) (CO7)

Q.19 Knurling operation is performed on lathe machine(True/False) (CO1)

Q.20 The swing diameter over the bed is the largest diameter(True/False) (CO9)

SECTION-C

Note: Short answer type questions. Attempt any twelve questions out of fifteen questions. (12x5=60)

Q.21 What are the advantages and limitations of Broaching? (CO13)

Q.22 Give the difference between cutting fluids and lubricants. (CO12)

Q.23 What are the types of cutting fluids. (CO12)

Q.24 Define fixtures and give its main purpose. (CO11)

Q.25 List any five work holding devices on shaper machine. (CO7)

Q.26 What are the difference between jigs and fixtures. (CO11)

Q.27 What is the working principle of lathe ? (CO1)

Q.28 What are the types of lathe bed? (CO9)

Q.29 Name any five types of reamers. (CO10)

Q.30 Give the specification or boring machine . (CO10)

Q.31 What is the difference between pull broaching and push broaching . (CO13)

Q.32 Define nose radius and give its value in mm. (CO2)

Q.33 What is the effect of cutting temperature on work piece (CO9)

Q.34 Give the difference between rough boring heads and twin cutter boring heads. (CO10)

Q.35 What is the difference between Turret and capstan lathe. (CO9)

SECTION-D

Note: Long answer type questions. Attempt any two questions out of three questions. (2x10=20)

Q.36 Draw a labeled sketch of quick return mechanism of shaper and explain its working . (CO7)

Q.37 Draw a neat sketch of lathe machine label its parts and explain its working. (CO9)

Q.38 Explain the construction and working of drilling machine. (CO4)

No. of Printed Pages : 4
Roll No. .....

181745/171745

4th Sem./ Mechanical Engg.

Subject : Industrial Engineering

Time : 3 Hrs. M.M. : 100

SECTION-A

Note: Multiple choice questions. All questions are compulsory (10x1=10)

Q.1 Productivity = (CO1)
a) Input / Output b) Output / Input
c) Output - Input d) Input - Output

Q.2 Work study examines (CO3)
a) method b) duration of work
c) both 'a' and 'b' d) None of the above

Q.3 The following chart(s) record the movements
a) operation process chart (CO5)
b) flow process chart
c) both 'a' and 'b'
d) None of the above

Q.4 The following factor(s) must be considered while selecting the work for method study(CO3)
a) Economic considerations
b) Technical considerations
c) Human reactions
d) All of the above

Q.5 In outline process chart, the horizontal lines represents (CO5)
a) general flow of process
b) materials being introduced
c) both 'a' and 'b'
d) None of the above

Q.6 Which is not work measurement? (CO5)
a) stop watch study b) work sampling
c) quality circle d) analytical examining

Q.7 A_____is based on film analysis (CO7)
a) SIMO chart b) Flow process chart
c) String diagram d) Operation flow chart

Q.8 The time taken for the job from its arrival to the system until its departure is (CO8)
a) completion time b) flow time
c) due time d) processing time

Q.9 In the network diagram: (CO9)
a) an activity and an event are represented by a circle
b) an activity and an event are represented by an arrow
c) an activity is represented by a circle and event by an arrow
d) an activity is represented by an arrow and event by a circle

Q.10 Product layout is best suited for: (CO8)
a) mass production b) job production
c) batch production d) all of the above

SECTION-B

Note: Objective Completion type questions. All questions are compulsory. (10x1=10)

Q.11 Define productivity. (CO1)

Q.12 Define work sampling. (CO2)

Q.13 Describe a bin card. (CO3)

Q.14 Define Inspection. (CO2)

Q.15 Define ergonomics. (CO3)

Q.16 Describe rest allowance. (CO4)

Q.17 Define direct labour. (CO4)

Q.18 Define 'overall time per unit'. (CO6)

Q.19 Give full form of PPC. (CO7)

Q.20 Write the types of store. (CO9)

SECTION-C

Note: Short answer type questions. Attempt any twelve questions out of fifteen questions. (12x5=60)

Q.21 Explain the contribution of standardization in improving productivity. (CO1)

Q.22 Enlist the advantages of work study. (CO2)

Q.23 Write a short note on role of work study in improving productivity. (CO3)

Q.24 Explain the procedure for method study analysis . (CO3)

Q.25 Write a short note on recording techniques through various diagrams. (CO5)

Q.26 Give the principle of motion analysis. (CO6)

Q.27 Explain SIMO charts. (CO7)

Q.28 Give the significance of ergonomics. (CO3)

Q.29 What is performance rating? Explain any two rating techniques. (CO4)

Q.30 Describe work sampling and give its use. (CO2)

Q.31 Describe Taylor's incentive system. (CO4)

Q.32 Explain the types of production. (CO5)

Q.33 Enlist the advantages of PPC. (CO6)

Q.34 Give the different types of layout of stores. (CO8)

Q.35 What are the factors that determine the level of inventory ? (CO9)

SECTION-D

Note: Long answer type questions. Attempt any two questions out of three questions. (2x10=20)

Q.36 Write short note on (CO3)

a) Factors for selection of work study

b) Basic procedure for work study

Q.37 Define the concept of standard time. Explain briefly clearly the steps involved in arriving at standard time, starting with observed time. (CO7)

Q.38 What do your understand by production, planning and control? What are the various objectives of PPC? (Co6)

No. of Printed Pages : 4

Roll No. .....

181752/171752/
121752/031752

5th Sem./ Mechanical Engineering

Subject : Refrigeration and Air Conditioning

Time : 3 Hrs. M.M. : 100

SECTION-A

Note: Multiple choice questions. All questions are compulsory (10x1=10)

Q.1 The Co-efficient of performance of a domestic refrigerator is: (CO1)

a) Equal to 1 b) less than 1

c) more than 1 d) None of these

Q.2 In a vapour compression refrigeration system, the heat is absorbed from the environment to be cooled by : (CO2)

a) Evaporator b) condenser

c) compressor d) receiver

Q.3 The Refrigerant commonly used in vapour absorption refrigeration system is: (CO2)

a) water b) ammonia

c) Freon d) carbon-dioxide

Q.4 The condensing medium used in evaporative condenser is: (CO1)

a) air only b) water only

c) air and water d) None of these

Q.5 Mass of water vapour present in 1 kg of dry air is known as : (CO3)

a) Degree of Saturation

b) Absolute Humidity

c) Relative Humidity

d) Humidity

Q.6 The amount of Heat required to raise the temperature of a substance through 1°C is known as: (CO1)

a) Sensible Heat b) Latent Heat

c) Enthalpy d) Specific Heat

Q.7 Full form of DPT is: (CO4)

a) Dry point Temp

b) Dew point Temp

c) Delta Pressure Temp

d) Dry Pole Temp

Q.8 BEE stands for (CO4)

a) Bureau of Energy Efficiency

b) Bureau of Efficient Energy

c) Bureau of Electronic Energy

d) None of these

Q.9 The cylinder colour code of ammonia is :(CO4)

a) Black b) Silver

c) Blue d) white

Q.10 The curved lines that follow the saturation curve along the toe of a psychrometric chart represent: (CO3)

a) Wet bulb temp. lines

b) Dry bulb temp. lines

c) Relative Humidity lines

d) Dew Point Temp lines

SECTION-B

Note: Objective type questions. All questions are compulsory. (10x1=10)

Q.11 Define Refrigeration. (CO1)

Q.12 Define Co-efficient of performance. (CO1)

Q.13 What is the effect of sub-cooling the refrigerant? (CO2)

Q.14 What is the chemical name of R-134a? (CO2)

Q.15 What is the condenser pressure of ammonia? (CO3)

Q.16 Name two types of water cooled condensers. (CO1)

Q.17 What are Azeotropes? (CO5)

Q.18 Define the Term Psychrometric Chart? (CO3)

Q.19 Define Star Rating. (CO5)

Q.20 Define Sensible cooling. (CO2)

SECTION-C

Note: Short answer type questions. Attempt any twelve questions out of fifteen questions. (12x5=60)

Q.21 Explain Ice refrigeration. (CO1)

Q.22 Write five properties of R134a. (CO4)

Q.23 Explain Domestic Electrolux Refrigerator. (CO2)

Q.24 Explain the working of Screw Compressor. (CO1)

Q.25 Write down the function and various types of condensers. (CO5)

Q.26 Explain the working of thermostat Switch. (CO7)

Q.27 Define Degree of Saturation and Relative Humidity. (CO6)

Q.28 Write down 10 applications of Air Conditioning. (CO4)

Q.29 Explain grand Sensible Heat Factor. (CO4)

Q.30 What is Auto-Deforsting ? How does it work? (CO5)

Q.31 Explain blast cooling. (CO5)

Q.32 The temperature of saturated air at atmospheric pressure is recorded as 35° C. Calculate (CO6)

i) Specific Humidity

ii) Enthalpy per KG of dry air

Q.33 Explain the working of Thermostatic expansion valve. (CO2)

Q.34 Explain Actual vapour compression refrigeration system. (CO2)

Q.35 A machine working on Carnot cycle operates between 305K and 260 K. (CO2)

Determine the C.O.P when it is operated as

i) A refrigerating machine

ii) A heat pump, iii) A heat Engine.

SECTION-D

Note: Long answer type questions. Attempt any two questions out of three questions. (2x10=20)

Q.36 Explain with the help of neat diagram theory and mechanism of simple vapour absorption refrigeration system. (CO2)

Q.37 Draw and explain various lines of psychrometric chart. (CO3)

Q.38 Explain with the help of neat diagram Car Air conditioning system. (CO1)

No. of Printed Pages : 4
Roll No. ..... 181753/171753/121753 /031753

5th Sem./ Mech./ Prod./ T&D/ CAD/ CAM / F&F

Subject : Workshop Technology - III

Time : 3 Hrs. M.M. : 100

SECTION-A

Note: Multiple choice questions. All questions are compulsory (10x1=10)

Q.1 Surfacing can be performed more effectively by_____milling machine. (CO2)
a) Horizontal
b) Vertical
c) Can't say anything
d) None of the mentioned

Q.2 Which of the following motion does a milling machine has ? (CO4)
a) Vertical motion b) crosswise motion
c) longitudinal motion d) all of the mentioned

Q.3 Which of the following methods produces gear by generating process_____ (CO6)
a) Hobbing b) Casting
c) Punching d) Milling

Q.4 Hobbing is a special type of which of the following ? (CO6)
a) Casting b) Grinding
c) Drilling d) Milling

Q.5 Grinding wheel is specified as C 8 K 5 B 17". Grain size of a wheel will be (CO4)
a) Coarse b) Medium
c) Fine d) Very fine

Q.6 Operation done to make periphery of grinding wheel concentric with its axis to recover its lost shape is known as (CO3)
a) Loading b) Glazing
c) Dressing d) Trueing

Q.7 In mechanical machining, material is removed by_____ (CO1)
a) Erosion b) Corrosion
c) Abrasion d) Vaporization

Q.8 An example of an anodic coating is_____(CO8)
a) Zinc b) Copper
c) Nickle d) Chromium

Q.9 Honing is used for finishing (CO9)
a) External cylindrical surface
b) Internal cylindrical surface
c) Both (a) and (b)
d) None of the above

Q.10 In lapping, the lubricant used to hold or retain the abrasive grains during operation is known as
a) Vehicle b) Holder
c) Absorber d) Retainer

SECTION-B

Note: Objective Completion type questions. All questions are compulsory. (10x1=10)

Q.11 Define milling. (CO2)

Q.12 Define straddle milling. (CO2)

Q.13 Define gear shaping. (CO6)

Q.14 Write the disadvantages of hobbing. (CO6)

Q.15 Define grinding wheel. (CO3)

Q.16 Name any two artificial abrasives. (CO4)

Q.17 Name any abrasive used in ultrasonic marching. (CO7)

Q.18 What is the other name of electric discharge machining? (CO7)

Q.19 Write purpose of lapping processes. (CO8)

Q.20 Define form lapping. (CO8)

SECTION-C

Note: Short answer type questions. Attempt any twelve questions out of fifteen questions. (12x5=60)

Q.21 Describe the form milling operation. (CO2)

Q.22 Explain briefly gang milling. (CO2)

Q.23 How is a milling machine specified? (CO5)

Q.24 How the milling machine are classified. (CO5)

Q.25 Describe the process 'Gear Shaping'. (CO6)

Q.26 Describe gear hobbing process. (CO6)

Q.27 Explain balancing of grinding wheel. (CO4)

Q.28 Write any five precautions to be taken in grinding. (CO3)

Q.29 Enlist various limitations of LBM. (CO7)

Q.30 What are the main advantages and disadvantages of electrochemical machining. (CO7)

Q.31 Explain with neat sketch the principle of lapping. (CO9)

Q.32 Write the five properties of good paint. (CO8)

Q.33 Define polishing process. Explain a polishing method. (CO9)

Q.34 Enlist any five purposes of finishing surfaces. (CO9)

Q.35 Write a short note on buffing process. (CO9)

SECTION-D

Note: Long answer type questions. Attempt any two questions out of three questions. (2x10=20)

Q.36 Draw a neat sketch of knee and column type milling and explain principle parts. (CO2)

Q.37 Explain centreless grinding and cylindrical grinding in details. (CO4)

Q.38 Define Ultrasonic machining (USM). Explain its principle of operation. Also write its various applications. (CO7)

No. of Printed Pages : 4

Roll No. ……

181754/171754/
121754/031751

Mechanical Engg

Subject : Theory of Machines

Time : 3 Hrs. M.M. : 100

SECTION-A

Note: Multiple choice questions. All questions are compulsory (10x1 = 10)

Q.1 The smaller and generally the driving gear of a pair of mated gears is called_____ (CO-3)

a) Pitch b) Module

c) Rack d) pinion

Q.2 A mechanism is an assemblage of_____ (CO-1)

a) Two links b) Three links

c) four links or more than four links

d) all of the above

Q.3 Creep in belt drive is due to…… (CO-2)

a) material of the pulley

b) uneven extensions and contractions due to varying tension

c) material of the belt

d) larger size of the driver pulley

Q.4 Which of the following would constitute a link…(CO-1)

a) piston, piston rings and gudgeon pin

b) piston and piston rod

c) piston rod and cross head

d) piston, piston-rod and cross head

Q.5 A cam with a roller follower would constitute following type of pair…… (CO-5)

a) lower pair b) higher pair

c) open pair d) close pair

Q.6 Which one of the following is a Dead weight type governor? (CO-6)

a) Porter Governor b) Hartnell Governor

c) Wilson-Hartnell Governor

d) Hartung Governor

Q.7 When the body vibrates under the influence of external force, then the body is said to be under_____ (CO-8)

a) free vibrations b) natural vibrations

c) forced vibrations d) damped vibrations

Q.8 In balancing of single-cylinder engine, the rotating unbalance is_____ (CO-9)

a) completely made zero and so also the reciprocating unbalance

b) completely made zero and the reciprocating unbalance is partially reduced

c) partially reduced and the reciprocating unbalance is completely made zero

d) partially reduced and so also the reciprocating unbalance

Q.9 A higher pair has_____. (CO-1)

a) Point contact b) Surface contact

c) No contact d) None of the above

Q.10 Which gear is used for connecting two coplanar and intersecting shafts? (CO-3)

a) Spur gear b) Helical gear

c) Bevel gear d) None of the above

SECTION-B

Note: Objective type questions. All questions are compulsory. (10x1=10)

Q.11 The distance between the corresponding point on adjacent teeth measured on the pitch circle is called_____. (CO-3)

Q.12 Minimum_____ links are required for a simple mechanism. (CO-1)

Q.13 The function of Governor in automobile is to_____ (CO-4)

Q.14 Crowning on pulleys helps_____ (CO-2)

Q.15 The pairs which are held together mechanically is known as_____ (CO-1)

Q.16 A circle passing through the pitch point with its centre at the centre of cam axis is known as_____. (CO-7)

Q.17 When equilibrium speed of all radii of rotation of the balls with in the working range is constant then the governer is said to be_____ (CO-6)

Q.18 The vibrations, in which there is a reduction in amplitude over every cycle are _____ vibrations (CO-8)

Q.19 To balance the reciprocating masses_____and _____ must be balanced (CO-9)

Q.20 A ball and a socket forms a _____ type of pair (CO-1)

SECTION-C

Note: Short answer type questions. Attempt any twelve questions out of fifteen questions. (12x5=60)

Q.21 Classify governor. (CO-6)

Q.22 Explain any 2 types of gear train. (CO-3)

Q.23 Write short note on longitudinal vibrations. (CO-8)

Q.24 Discuss the various causes of vibrations. (CO-8)

Q.25 Discuss the various materials used for ropes and belts. (CO-2)

Q.26 Explain the working of Oldham's coupling. (CO-1)

Q.27 Discuss the method of balancing rotating mass in same plane. (CO-9)

Q.28 Differentiate structure and machine. (CO-1)

Q.29 Explain different types of kinematic pairs. (CO-1)

Q.30 Differentiate between coefficient of fluctuation of speed and coefficient of fluctuation energy. (CO-5)

Q.31 Two gears A & B having teeth of 200 and 400. If the gear A is rotating in clockwise direction at 52 RPM, what will be the speed and direction of gear B. (CO-3)

Q.32 Draw the displacement diagram of CAM with SHM. (CO-4)

Q.33 What is the purpose of crowning of pulleys? (CO-2)

Q.34 Draw hartwell governor. (CO-5)

Q.35 Write short note on epicyclic gear train. (CO-3)

SECTION-D

Note: Long answer type questions. Attempt any two questions out of three questions. (2x10=20)

Q.36 Enumerate the relative advantages and disadvantages of belt, rope and gear drive. (CO-2 & CO-3)

Q.37 The mass of a flywheel is 4000 kg, which has a radius of 2 m. Calculate the amount of energy the flywheel will store in changing it's speed from 460 rpm to 462 rpm? (CO-5)

Q.38 Two pulleys of diameter 50 cm and 100 cm mounted on two parallel shafts 1500 cm apart are connected by leather open belt 15 mm wide. The speed of the belt is 540m/min and coefficient of friction as 0.25 If the safe tension is 14 N/mm width, calculate the maximum power transmitted. (CO-2)

Note: Course Outcome (CO) mentioned in the question paper is for official purpose only.

No. of Printed Pages : 4

Roll No. ..... 181755/171755/121755 /031755

Mechanical Engg

Subject : CNC Machines and Automation

Time : 3 Hrs. M.M. : 100

SECTION-A

Note: Multiple choice questions. All questions are compulsory (10x1=10)

Q.1 The axis perpendicular to work holding surface of a CNC machine is (CO3)

a) X b) Y

c) Z d) W

Q.2 Point-to-point systems are used for_____ (CO2)

a) drilling b) parting

c) grooving d) facing

Q.3 Which type of feedback device used in CNC machine? (CO1)

a) Positional feed back device

b) Velocity feedback device

c) Both a and b

d) None of the above

Q.4 In servo motor, input command is (CO1)

a) Magnetic field b) Electrical pulses

c) Mechanical device d) Hydraulic device

Q.5 In a DNC system (CO1)

a) many machine tools can be controlled simultaneously

b) only a single machine tool can be controlled

c) NC machine cannot be controlled

d) non of the mentioned

Q.6 The other name for G-codes is _____ (CO2)

a) spindle speed codes

b) preparatory codes

c) Governing codes

d) miscellaneous codes

Q.7 Which of the following code will give circular interpolation anti-clockwise? (CO2)

a) G00 b) G01

c) G02 d) G903

Q.8 Which of the following code is used in programming in incremental coordinates? (CO2)

a) G92 b) G90

c) G91 d) G94

Q.9 LVDT has got_____number of windings (CO1)

a) 04 b) 02

c) 03 d) 08

Q.10 The CNC control sytem which has no feedback are also called as (CO1)

a) uncontrolled systems

b) controlled systems

c) closed systems

d) open systems

SECTION-B

Note: Objective type questions. All questions are compulsory. (10x1=10)

Q.11 Expand MCU (CO1)

Q.12 Give binary equivalent of 108 (CO1)

Q.13 The setting of tools to a specific length, away from the machine is called _____ (CO1)

Q.14 Recirculating ball screw nut mechanism in CNC machine is used to_____ (CO1)

Q.15 Which feedback device translate physical motion into electrical data? (CO1)

Q.16 Name any two types of NC program reader. (CO1)

Q.17 The function of slideways in CNC is to_____ (CO1)

Q.18 Expand ATC (CO1)

Q.19 _____ code is used for DWELL function (CO2)

Q.20 Expand SCARA robot. (CO6)

SECTION-C

Note: Short answer type questions. Attempt any twelve questions out of fifteen questions. (12x5=60)

Q.21 Enlist the advantages of CNC (CO1)

Q.22 Discuss the Types of CNC (CO1)

Q.23 Explain the purpose of PLC (CO1)

Q.24 What are the special mechanical design features of CNC? (CO5)

Q.25 Write short not on stepper motors (CO1)

Q.26 Explain hydrostatic slideways (CO1)

Q.27 Write short note on safety and guarding devices (CO1)

Q.28 Define pallete. Explain the types of palletes.(CO5)

Q.29 Discuss tool change cycle. (CO1)

Q.30 Classify sensors. (CO1)

Q.31 Explain the concept of tool offsets in CNC. (CO7)

Q.32 Write short not on canned cycles (CO7)

Q.33 Explain the utility of discussion forms (CO5)

Q.34 Explain any one type of AGV (CO6)

Q.35 Write a simple finishing cut program in absolute mode for step turning (CO2)

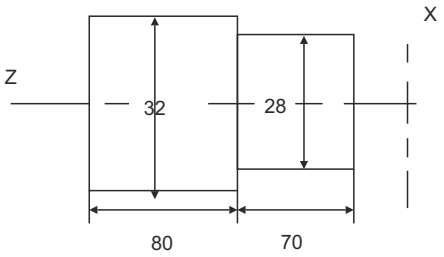

SECTION-D

Note: Long answer type questions. Attempt any two questions out of three questions. 2x10=20

Q.36 Explain the function and working of recirculating ball screw mechanism with a neat diagram. (CO1)

Q.37 Write short notes no :

a) Encoders

b) LVDT

Q.38 Write a complete drill program for the following part. Assume any missing data of dimension

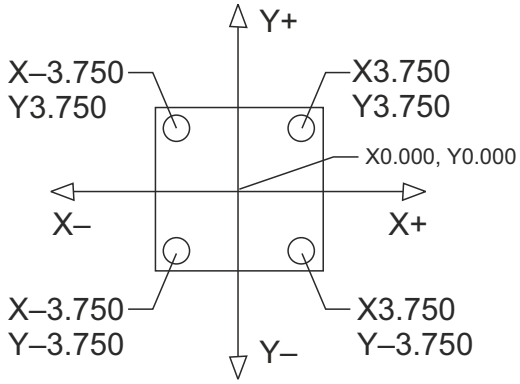

No. of Printed Pages : 4
Roll No. 181756/171756

Mechanical Engineering
Subject : Machine Design

Time : 3 Hrs. M.M. : 100

SECTION-A

Note: Multiple choice questions. All questions are compulsory (10x1=10)

Q.1 The factor of safety of steel and for steady load is (CO-1)

a) 2 b) 4
c) 6 d) 8

Q.2 Steel containing up to 0.15% carbon is known as (CO-2)

a) Mild steel b) Dead mild steel
c) Medium carbon steel
d) High carbon steel.

Q.3 The maximum shear stress developed in a beam cf rectangular section to _____ the average shear stress (CO-4)

a) Equal to b) 4/3 times
c) 1.5 time d) None of these

Q.4 One of the following which one is better method of making a shaft. (CO-5)

a) Cold rolling b) Hot rolling
c) Cold drawing d) Machine turning.

Q.5 Crank shaft is made by (CO-5)

a) Forging b) Carting
c) Pressing d) Drawing

Q.6 A woodruff key is generally used in (CO-6)

a) Machine tool industry
b) Automobile industry
c) Textile industry
d) Hydraulic industry

Q.7 The sleeve or muff coupling is designed as a (CO-6)

a) Thin cylinder b) Thick cylinder
c) Solid shaft d) Hollow shaft.

Q.8 Boiler rivets are used in (CO-6)

a) Frame b) Buckets
c) Boiler shells d) Boxes.

Q.9 Soldering is similer to (CO-6)

a) Threading b) Riveting
c) Brazing d) Seaming.

Q.10 A screw is specified by its (CO-6)

a) Major diameter b) Minor diameter
c) Pitch diameter d) pitch.

SECTION-B

Note: Objective type questions. All questions are compulsory. (10x1=10)

Q.11 Elasticity is opposite to _____ (CO-1)

Q.12 The ratio of ultimate stress to design stress is known as_____ (CO-2)

Q.13 Maximum normal stress theory is used for _____ materials. (CO-3)

Q.14 At the neutral axis of the beam, the shear stress is _____ (CO-4)

Q.15 The steel widely used for motor car crank shaft is _____ (Chromes steel/nickel steel). (CO-5)

Q.16 Shaft are made of mild steel and_____ (CO-5)

Q.17 Square keys are manufacturing on_____ (CO-6)

Q.18 What is a flange coupling? (CO-6)

Q.19 A rivet is identified by _____ (type of head/shank diameter) (CO-6)

Q.20 Shank is specified by_____ (CO-6)

SECTION-C

Note: Short answer type questions. Attempt any twelve questions out of fifteen questions. (12x5=60)

Q.21 What are the basic requirements for designing a machine part? (CO-1)

Q.22 Define load. Explain various types of loads. (CO-2)

Q.23 Define creep and fatigue. (CO-3)

Q.24 State the need of theories of failure? (CO-4)

Q.25 What is maximum stress theory? (CO-4)

Q.26 Classify and explain different types of shafts(CO-5)

Q.27 What are the causes of shaft failure. (CO-5)

Q.28 Explain various methods of manufacturing shafts (CO-5)

Q.29 What is key? State the function of key. (CO-6)

Q.30 Discuss the function of coupling (CO-6)

Q.31 Differentiate between temporary and permanent joints. (CO-6)

Q.32 Define joints. Classify different types of riveted joints. (CO-6)

Q.33 What are advantages of welded joints over riveted joints. (CO-6)

Q.34 State the difference between bolt over and stud. (CO-6)

Q.35 Define term screw thread. (CO-6)

SECTION-D

Note: Long answer type questions. Attempt any two questions out of three questions. (2x10=20)

Q.36 Explain in detail the general design procedure. (CO-1)

Q.37 A shaft running of 400 r.p.m transmit 10 kw. Assuming allowable shear stress in shaft as 40 Mpa. find the diameter of the shaft. (CO-5)

Q.38 Explain the procedure for designing a longitudinal and circumferential joint for a boiler. (CO-6)

No. of Printed Pages : 4
Roll No. .....

181761A/171761A

6th Sem./ Mechanical / Engineering

Subject : Plant Maintenance and Material Handling

Time : 3 Hrs. M.M. : 100

SECTION-A

Note: Multiple choice questions. All questions are compulsory (10x1=10)

Q.1 _____is the process of restoring the machine to good working condition after damage or wear. (CO1)

a) Testing b) Repair
c) Maintenance d) None of these

Q.2 The maximum and minimum sizes indicated by a toleranced dimension are called____ (CO2)

a) Limit b) Deviation
c) Allowance d) All of the above

Q.3 Product layout is also called____layout (CO4)

a) Process b) Product
c) Fixed d) Combined

Q.4 From the following is not a foundation bolt(CO3)

a) Eye bolt b) Rag bolt
c) Lewis bolt d) Screw jack

Q.5 4 in ship manufacturing, the type of layout preferred is (CO5)

a) Product layout

b) Process layout
c) Fixed position layout
d) Combination layout

Q.6 _____test is used for checking the accuracy of work done on the machine. (CO4)

a) Geometrical test b) Performance test
c) Testing Under Load d) Idle run test

Q.7 _____is a phenomenon in which friction between moving surface is reduced by thin layer of substance is called lubricant (CO2)

a) Lubrication b) Friction
c) Force d) None of the above

Q.8 A____crane in lifting machine generally equipped with a wire rope drum that can be used to lift and lower materials and move them horizontally. (CO4)

a) Crane b) Elevator
c) Hoists d) Conveyors

Q.9 _____is a horizontal portable platform device used as a base for handling materials in a unit load. (CO1)

a) AGVs
b) Pallet
c) Automated storage system
d) None of the above

Q.10 Managing the manpower planning according to the need of enterprise is the objective of manpower planning. (CO3)

a) True b) False
c) Both A & B d) None of the above

SECTION-B

Note: Objective Completion type questions. All questions are compulsory. 10x1=10

Q.11 What is repair? (CO1)

Q.12 Name different acceptance tests for machine tools (CO2)

Q.13 Name different types of foundation bolts (CO3)

Q.14 Define foundation. (CO5)

Q.15 Write the function of spirit level. (CO4)

Q.16 Define spare part (CO3)

Q.17 What is scheduled maintenance. (CO2)

Q.18 What is lubrication? (CO1)

Q.19 Name methods of lubrication used in different manufacturing operations. (CO4)

Q.20 Define mechanical handing equipment (CO5)

SECTION-C

Note: Short answer type questions. Attempt any twelve questions out of fifteen questions. 12x5=60

Q.21 Write the advantages of maintenance. (CO2)

Q.22 Draw B-T curve. (CO3)

Q.23 What is the necessary of plant layout? (CO5)

Q.24 Write the disadvantages of product layout (CO1)

Q.25 Write a short note on foundation plan. (CO4)

Q.26 What is group technology layout. (CO3)

Q.27 Write a short note on idle run test. (CO2)

Q.28 What are the disadvantages of maintenance? (CO4)

Q.29 Write the stages of corrective maintenance (CO5)

Q.30 Write the disadvantages of breakdown maintenance. (CO3)

Q.31 Write the objective of spare part management. (CO4)

Q.32 Write the causes of failure of seals, packing and gaskets and their remedial measures. (CO2)

Q.33 What is the function of lubrication? (CO2)

Q.34 Write the objective of automated storage systems. (CO3)

Q.35 Explain automated guided vehicle (AGVs) (CO5)

SECTION-D

Note: Long answer type questions. Attempt any two questions out of three questions. 2x10=20

Q.36 Write the factors which affect economic aspects of maintenance. Explain. (CO4)

Q.37 What is maintenance? What are its different types? Explain briefly. (CO2)

Q.38 Explain the factors which affects plant layout. (CO3)

Q.24 Compare the physical components of hydraulic and pneumatic system. (CO4)

Q.25 Defined encoding and decoding process .(CO6)

Q.26 What are Boolan algebra and Boolan numbers? (CO6)

Q.27 What are the advantages of PLC over a relay control system. (CO10)

Q.28 List down the application of logic gate. (CO6)

Q.29 Explain the working of mechanical switches. (CO5)

Q.30 Differentiate between parallel data transfer and serial data transfer. (CO5)

Q.31 Explain the term stability and sensitivity.(CO2)

Q.32 List the various types of display. (CO7)

Q.33 Convert $(11)_{10}$ to it Binary equivalent. (CO9)

Q.34 Write the name of various data transfer techniques. (CO8)

Q.35 Explain the principles of Strain gauges. (CO5)

SECTION-D

Note: Long answer type questions. Attempt any two questions out of three questions. (2x10=20)

Q.36 Draw a structure of a microcontroller. (CO6)

Q.37 Explain the construction and working of Air cylinder. In brief. (CO5)

Q.38 Explain the components of PLC with suitable diagram. (CO10)

No. of Printed Pages : 4

Roll No. .....

181761B/171761B

6th Sem./ Mechanical Engg

Subject : Mechatronics

Time : 3 Hrs. M.M. : 100

SECTION-A

Note: Multiple choice questions. All questions are compulsory (10x1=10)

Q.1 A good example of a standalone Mechatronics system is (CO1)

a) washing machine b) wire craft

c) CIM d) humanoid robot

Q.2 In closed loop system the control action is(CO1)

a) dependent on the output

b) independent of the output

c) partially dependent on the output

d) none of the above

Q.3 A sensor is (CO3)

a) an element which acquires a physical parameters into a signal

b) a device that converts a physical parameter into mechanical signal

c) an instrument that acquires a signal into many output signals

d) a device that senses the speed of the car

Q.4 Instrument is preferred for the applications based on (CO4)

a) accuracy b) precision
c) both of the above d) none of the above

Q.5 An_____acts as a storage device for high pressure fluid storage and release the fluid at a required system pressure (CO4)

a) accumulator b) receiver
c) tank d) none of the above

Q.6 Series motor has (CO5)

a) low starting torque b) high starting torque
c) low starting current d) both (b) and ©

Q.7 The speed of a DC motor is proportional to the (CO5)

a) Applied voltage b) counter e.m.f
c) armature reaction d) none of the above

Q.8 The term PLC stands for (CO10)

a) personal logic controller
b) Programmable logic controller
c) Programmable logic computer
d) none of the above

Q.9 Information entered in a _____is not changes once it is entered. (CO9)

a) ROM b) RAM
c) EPROM d) EEPROM

Q.10 The cycle time of PLC is the time it takes to

a) read an input signal (CO10)
b) read all input signals
c) Check all input signals
d) read all input and run the program

SECTION-B

Note: Objective Completion type questions. All questions are compulsory. (10x1=10)

Q.11 Main requirement of a good control system is_____ (CO1)

Q.12 LVDT can be used for measuring_____ (CO4)

Q.13 What is transducers? (CO4)

Q.14 Function of a check valve is to allow the fluid flow in _____. (CO4)

Q.15 The synchronous speed of an induction motor refers to the speed of the_____ (CO5)

Q.16 What is mean by logic gate? (CO6)

Q.17 The 8086 microprocessor is_____ bit microprocessor . (CO7)

Q.18 Draw the symbol of AND gate. (CO6)

Q.19 Name the valve used to restrict the air flow in one side. (CO9)

Q.20 The full form of NC in PLC programming. (CO10)

SECTION-C

Note: Short answer type questions. Attempt any twelve questions out of fifteen questions. (12x5=60)

Q.21 Describe the role of Mechatronics in manufacturing industries. (CO1)

Q.22 Explain the working principle of LVDT. (CO4)

Q.23 Explain any one motion sensor. (CO2)

Q.32 Explain view ports with an example. (CO3)

Q.33 Explain the various types of machining process parameters? (CO5)

Q.34 Describe the application of 3D array. (CO3)

Q.35 Explain parametric surface in AutoCAD. (CO1)

SECTION-D

Note: Long answer type questions. Attempt any two questions out of three questions. 2x10=20

Q.36 Explain the various types of the tool holder and tool storage devices in CNC. (CO5)

Q.37 What are the various types of FMS layout? Discuss them schematically. (CO7)

Q.38 Write a part program for milling the part as given in figure, assume any missing dimension.(CO6)

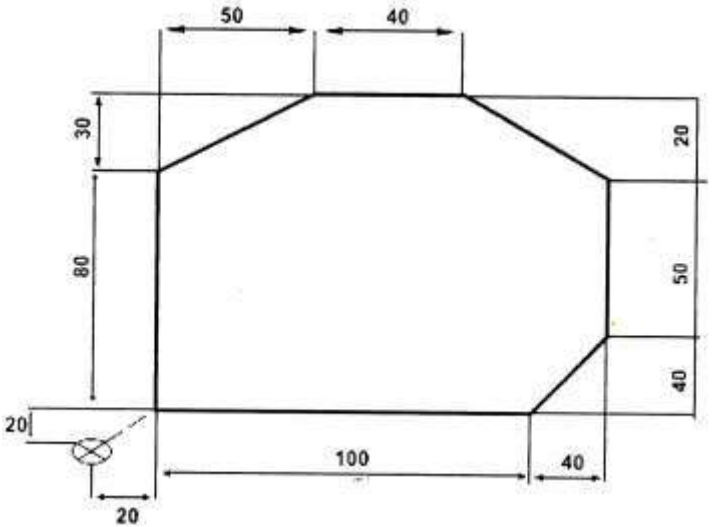

Note: Course Outcome (CO) mentioned in the question paper is for official purpose

No. of Printed Pages : 4

Roll No. .....

181761C/171761C /62463

6th Sem./ Mechanical Engg.

Subject : CAD/CAM

Time : 3 Hrs. M.M. : 100

SECTION-A

Note: Multiple choice questions. All questions are compulsory (10x1=10)

Q.1 _____command in AUTOCAD is used as shortcut for making a poly line (CO1)

a) PL b) POL

c) POLY d) PLN

Q.2 _____command in AUTOCAD is used as shortcut for making a circle (CO2)

a) C b) CIRL

c) CIRCLE d) CIR

Q.3 In following geometric modeling techniques which in not 3-D modeling ? (CO3)

a) Wireframe modeling

b) Drafting

c) Surface modeling

d) Solid modeling

Q.4 In the following geometric primitives, which is not solid entity of CSG modeling (CO3)

a) Box b) Cone

c) Cylinder d) Circle

Q.5 APT is _____programming language.(CO4)

a) CNC b) Robot

c) NC d) PLC

Q.6 The _____command in Auto CAD is used to combine the selected 2D regions or 3D solids by the addition. (CO2)

a) join b) unity
c) combine d) union

Q.7 SW isometric view stands for_____. (CO3)

a) software b) soft wall
c) South -West d) Surrounded West

Q.8 The extension of Auto CAD drawing file is(CO2)

a) DRG b) DXF
c) DWT d) DWG

Q.9 The basic geometric building blocks provided in a CAD/CAM package are (CO2)

a) Points b) lines
c) circles d) all of the mentioned

Q.10 Flexible Manufacturing System (FMS) is generally limited to firms involved in_____. (CO7)

a) mass production b) batch production
c) Both (a) and (b) d) none of the above

SECTION-B

Note: Objective type questions. All questions are compulsory. (10x1=10)

Q.11 What is a CAM? (CO1)

Q.12 What is the function of filleting command in Auto CAD? (CO2)

Q.13 Define the Bezier curve. (CO3)

Q.14 Define depth of cut. (CO4)

Q.15 What is mean by lead out? (CO5)

Q.16 What do understand by the term 'flexibility' in FMS'? (CO7)

Q.17 _____code is used in programming in absolute coordinates? (CO6)

Q.18 The rounded corners of an object are made in Auto CAD by_____command (CO2)

Q.19 What means by AML. (CO3)

Q.20 The machine zero on the lathe is generally set at_____. (CO4)

SECTION-C

Note: Short answer type questions. Attempt any twelve questions out of fifteen questions. (12x5=60)

Q.21 What are the various applications of CAD/ CAM? (CO1)

Q.22 What are the requirement of graphics software? (CO2)

Q.23 Name the various types of 3-D construction method. (CO3)

Q.24 Define point and lines in the two-dimensional coordinate system. (CO4)

Q.25 Write a simple program for a face turning .(CO5)

Q.26 What is the preparatory function for milling part programming. (CO5)

Q.27 What are canned cycles for turning part programming? (CO5)

Q.28 What do understand by the terms like contouring, pocketing, facing and overlap. (CO5)

Q.29 Describe practical examples of "subtraction" Boolean function. (CO3)

Q.30 Give a practical example of MIRROR. (CO2)

Q.31 What is teach pendant programming in robots. (CO8)

No. of Printed Pages : 4

Roll No. ..... 181762/171762/121762 /31762/8452/31846

Mech.

Subject : Inspections & Quality Control / Metrology

Time : 3 Hrs. M.M. : 100

SECTION-A

Note: Multiple choice questions. All questions are compulsory (10x1=10)

Q.1 The unit of Luminous intensity is_____? (CO1)

a) Cendela b) Meter

c) Kelvin d) mole

Q.2 _____the proess of comparing an unknown quantity with a known fixed unit quantity. (CO1)

a) Kaizen b) Calibration

c) Measurement d) Maintenance

Q.3 The square of standard deviation is known as. (CO4)

a) Mode b) Dispersion

c) Range d) Variance

Q.4 Write the full form of T.Q.M? (CO6)

a) Technical quality management

b) Total quality material

c) Total quality management

d) Total quality measurement

Q.5 _____transducer do not develop their own voltage or current ? (CO7)

a) Active b) Passive

c) Digital d) Analog

Q.6 An X bar chart use the following data. (CO4)

a) Count data

b) Attribute measurement data

c) Variable measurement data

d) None of the above

Q.7 Ring gauge is used for _____ (CO2)

a) Outer diameter

b) Inner diameter

c) Angle measurement

d) Length of shaft

Q.8 LCL for the R chart is given by_____. (CO4)

a) D3 R b) D2 R

c) R-D3 R d) d2 R

Q.9 TQM focuses on (1) Supplier (2) Employee (3)Customer. The correct answer is_____.

a) 1and 3 only b) 3 only (CO6)

c) 2 and 3 only d) 1,2,and 3

Q.10 Clinometer is use for_____ (CO2)

a) Angular measurement

b) Straightness length

c) Flatness

d) Diameter

SECTION-B

Note: Objective type questions. All questions are compulsory. (10x1=10)

Q.11 List any two types os interchangeability ? (CO1)

Q.12 List any two steps pf planning of inspection ? (CO1)

Q.13 What is national standards? (CO1)

Q.14 What for an autocollimator is used? (CO3)

Q.15 Name any two type of errors. (CO3)

Q.16 Define control charts? (CO4)

Q.17 Give any two example of control charts for Variables . (CO4)

Q.18 Write the name of quality control tools. (CO6)

Q.19 Define 5S? (CO6)

Q.20 Define working standard.

SECTION-C

Note: Short answer type questions. Attempt any twelve questions out of fifteen questions. (12x5=60)

Q.21 Write five main objectives of inspection. (CO1)

Q.22 What are the Line Standards and End Standards? how do they differ? (CO1)

Q.23 Define autocollimator in detail. (CO3)

Q.24 Discuss single sampling plan? (CO5)

Q.25 Give the classification of Systematic Error? Write any two. (CO3)

Q.26 Draw the labelled diagram of outside Micrometer (CO2)

Q.27 Define plug gauge with neat sketch? (CO2)

Q.28 With the help of suitable sketch explain the followings (CO4)

a) Frequency Histogram

b) A Bar chart

Q.29 Explain vernier caliper with diagram and principle. (CO2)

Q.30 Enlist any five methods of taking samples? (CO5)

Q.31 Write any five advantages of LVDT. (CO7)

Q.32 Define sine bar with the help of neat sketch? how will you use it for taper measurement? (CO2)

Q.33 Explain S.Q.C in detail. (CO6)

Q.34 What us ISO-9000? What are its advantages? (CO6)

Q.35 Calculate the mean deviation of 3,6,6,7,8, 11,15, and 16? (CO4)

SECTION-D

Note: Long answer type questions. Attempt any two questions out of three questions. (2x10=20)

Q.36 Explain the methods of taking samples? (CO5)

Q.37 Name the various types of QC tools. Explain any four? (CO6)

Q.38 Explain transducer. How will you classify transducers ? (CO7)

No. of Printed Pages : 4

Roll No. .....

181763/171763 /121763/31763

6th Sem./ Mechanical Engineering

Subject : Automobile Engineering

Time : 3 Hrs. M.M. : 100

SECTION-A

Note: Multiple choice questions. All questions are compulsory (10x1=10)

Q.1 A diesel engine as compared to petrol engine (both running at full load is) is (CO1)

a) Less efficient b) More efficient
c) Equally efficient d) None of these

Q.2 The problems caused by the wheel imbalance are (CO2)

a) Hard steering and hard ride
b) Poor acceleration and hard steering
c) Steering wheel vibrations and uneven tyre wear
d) Poor acceleration and reduced fuel efficiency

Q.3 The torque converter uses_____to transfer torque. (CO3)

a) Air
b) Auto matic transmission fluid
c) Gear
d) Steel belt

Q.4 The instrument used to check specific gravity of acid in a battery is (CO5)

a) Hydrometer b) Hygrometer
c) Anemometer d) Multimeter

Q.5 The petrol engine works on (CO5)

a) Otto cycle b) Diesel cycle
c) Carnot cycle d) Diesel cycle

Q.6 The starter motor is driven by (CO6)

a) Chain drive b) Gear drive
c) Flat belt drive d) V-belt drive

Q.7 The component in the radiator of an automobile that increases the boiling point of water is(CO6)

a) Drain plug b) Water jacket
c) Vacuum valve d) Pressure cap

Q.8 If the engine coolant leaks into the engine oil, then engine oil. (CO6)

a) Appears milky b) Become Foamy
c) Turns black d) None of these

Q.9 A clutch is usually designed to transmit maximum torque which is (CO6)

a) Equal to the maximum engine torque
b) 80% of the maximum engine torque
c) 150% of the maximum engine torque
d) None of these

Q.10 In a four stroke engine for each crankshaft revolution, the camshaft revolves (CO6)

a) One half turn b) One turn
c) Two turns d) Four turns

SECTION-B

Note: Objective Completion type questions. All questions are compulsory. 10x1=10

Q.11 Define an automobile. (CO1)

Q.12 Name two components of an automobile (CO1)

Q.13 Name any two popular cars with continuously variable transmission. (CO2)

Q.14 What is tractive effort ? (CO2)

Q.15 What is the value of king pin inclination angle? (CO3)

Q.16 What is steering wheel. (CO3)

Q.17 What is the function of parking brakes? (CO4)

Q.18 Define spring rate. (CO5)

Q.19 Name two types of suspension springs. (CO5)

Q.20 Define battery capacity. (CO6)

SECTION-C

Note: Short answer type questions. Attempt any twelve questions out of fifteen questions. 12x5=60

Q.21 Write a short note on 6x4 wheel drive. (CO1)

Q.22 Write a short note on electric vehicles. (CO1)

Q.23 Classify gear box. (CO2)

Q.24 Write the functions of transmission system. (CO2)

Q.25 What is the necessity of gear box? (CO2)

Q.26 Write the advantages of single plate clutch. (CO2)

Q.27 Write the functions of tyres. (CO2)

Q.28 Write the principle hydraulic power steering. (CO3)

Q.29 Explain, in brief, power steering. (CO3)

Q.30 Classify brakes according to mode of operation. (CO4)

Q.31 Write the advantages of hydraulic brake system (CO4)

Q.32 Explain air suspension system with the help of neat sketch. (CO5)

Q.33 Write the functions of suspension system (CO5)

Q.34 Explain trickle charging of battery. (CO6)

Q.35 Write the functions of electrical system in an automobile. (CO6)

SECTION-D

Note: Long answer type questions. Attempt any two questions out of three questions. 2x10=20

Q.36 Define automobile . Name its different components. Explain briefly. (CO1)

Q.37 Explain the construction and working of single plate clutch with the help of neat sketch. (CO2)

Q.38 Explain Davis steering mechanism with the help of neat sketch.

No. of Printed Pages : 4
Roll No. 181765/171765

6th Sem./ Mechanical Engineering

Subject : Estimating and Costing

Time : 3 Hrs. M.M. : 100

SECTION-A

Note: Multiple choice questions. All questions are compulsory (10x1=10)

Q.1 Estimation is done (CO1)
a) during manufacturing
b) before manufacturing
c) After manufacturing
d) All of the above

Q.2 Which one of the following helps in calculating the actual cost of manufactured product (CO1)
a) Costing b) Estimation
c) Depreciation d) Budget

Q.3 Choose correct related to indirect material. (CO2)
a) Wood for furniture b) Mild steel for shaft
c) Grease d) None of these

Q.4 A method of calculating depreciation is (CO2)
a) Unit rate method
b) Percentage of direct labor cost
c) Sinking fund method
d) None of these

Q.5 "Percentage on book value method" is also known as . (CO2)
a) Diminishing balance method
b) Unit rate method
c) Straight line method
d) Sinking fund method

Q.6 Factory cost is the sum of Prime cost and (CO3)
a) Sales expense
b) Distribution expenses
c) Factory expenses
d) None of these

Q.7 Administration overhead includes (CO3)
a) Office rent b) Salary of clerk
c) Sales expenses d) None of these

Q.8 Efficiency of the worker, plant and machine is provided by (CO4)
a) Estimation
b) Depreciation
c) Cost accounting
d) Financial accounting

Q.9 Which one of the following related to personnel allowance of (CO4)
a) Tool changing
b) Drinking water
c) Inconvenient posture
d) Checking of dimensions

Q.10 In large industry, estimating department functions under (CO5)
a) Production manager
b) Production department
c) Planning Department
d) Sales Department

SECTION-B

Note: Objective Completion type questions. All questions are compulsory. 10x1=10

Q.11 The time taken to convert raw material into finished product is known as_____ (CO1)

Q.12 Assignment of work to a worker, machine or equipment is known as_____ (CO1)

Q.13 Fixation of stating and finishing time for a job is known as_____ (CO1)

Q.14 Finding the most economical path of doing work is called_____ (CO2)

Q.15 Drafting time is related to_____ (CO2)

Q.16 Material cost=cost per unit weight x _____ (CO2)

Q.17 Over estimation leads to_____ (CO3)

Q.18 Under estimation leads to_____ (CO3)

Q.19 Budget related to the improvement in quality of product is known as_____ (CO5)

Q.20 Define overhead. (CO6)

SECTION-C

Note: Short answer type questions. Attempt any twelve questions out of fifteen questions. 12x5=60

Q.21 Write the function of estimating. (CO1)

Q.22 Explain comparison of estimating and costing. (CO1)

Q.23 Define cost of production. (CO1)

Q.24 Define selling price and capital investment . (CO2)

Q.25 Write the objectives of costing. (CO2)

Q.26 Differentiate between idealness cost and repairs and maintenance cost. (CO1)

Q.27 Write the element of costs. (CO1)

Q.28 Explain the methods calculation of depreciation cost. (CO2)

Q.29 Explain the methods of allocation of overhead charges. (CO2)

Q.30 What are the objectives of cost accounting? (CO2)

Q.31 Differentiate between financial accounting and cost accounting. (CO3)

Q.32 Write the advantages of cost accounting (any five). (CO3)

Q.33 Write the principal factors in estimating. (CO4)

Q.34 What is budget? Explain types of budget. (CO5)

Q.35 Write any five application of estimating and costing. (CO6)

SECTION-D

Note: Long answer type questions. Attempt any two questions out of three questions. 2x10=20

Q.36 What are the different methods of calculating depreciation? Explain any two of them. (CO1)

Q.37 Explain the calculation in weld cutting cost with a suitable example. (CO4)

Q.38 Explain the estimation of cost of foundry shop. (CO5)